THE POWER OF RED™

SPACE-LIFT™

CONCRETE
CONSTRUCTION
PRODUCTS

APPLICATION GUIDE

SYMONS®
By Dayton Superior

A WORD ABOUT SAFETY

High productivity depends on safety; even a minor accident causes job delays and inefficiency, which run up costs. That's why Symons by Dayton Superior, in the design of its systems and products, makes the safety of those people who will be working with and near the equipment one of its primary concerns. Every product is designed with safety in mind, and is tested to be certain that it will perform as intended with appropriate safety allowances. Factory-built systems such as these provide predictable strength, minimizing the uncertainty that often surrounds "hand-made," "job-shop" and "job-built" equipment.

As a result, Symons by Dayton Superior products are your best assurance of a safe operation when used properly. To insure proper use, we have published this application guide. We recommend that all construction personnel who will be involved, directly or indirectly, with the use of this product be familiar with the contents of this guide.

As a concerned participant in the construction industry, Symons by Dayton Superior also recommends that regular safety meetings be held prior to starting the forming operation, and regularly throughout the concrete placement, form stripping and erection operations. Symons by Dayton Superior personnel will be happy to assist in these meetings with discussion of safe use of the equipment, slide presentations and other formal safety information provided by such organizations as the Scaffolding, Shoring and Forming Institute.

In addition to the above meetings, all persons involved with the construction should be familiar and in compliance with applicable governmental regulations, codes and ordinances, as well as the industry safety standards developed and published by each of the following:

American Concrete Institute
American National Standards Institute
The Occupational Safety and Health Administration
The Scaffolding, Shoring and Forming Institute

Because field conditions vary and are beyond the knowledge and control of Symons by Dayton Superior, safe and proper use of this product is the responsibility of the user.

TABLE OF CONTENTS

SPACE-LIFT™ INTRODUCTION.....1
SPACE-LIFT™ SYSTEM COMPONENTS.....3
SPACE-LIFT SYSTEM ACCESSORIES.....5
SPACE-LIFT™ ASSEMBLY TOOLS.....10
Required Tools Specific to Space-Lift:.....10
General Gang Form Tools:.....10
Pre-cut wood for assembly of (1) unit:.....10
SPACE-LIFT ASSEMBLY INSTRUCTIONS.....10
Work area layout.....10
SPACE-LIFT™ SYSTEM CYCLING.....22
Lifting.....22
Landing.....22
Wall and Form Maintenance and Preparation.....22
Position and Tie.....22
SPACE-LIFT CURVED WALL.....23
Specific Recommendation:.....24
Anchor center example:.....24
Crane Picks:.....28
Bracing:.....28
Space-Lift Tie Back Bumper:.....28
SAFETY RULES.....29
Space-Lift Assembly.....29
Space-Lift Use.....29
SPACE-LIFT PRODUCT INDEX.....30

SPACE-LIFT™ INTRODUCTION

The Symons Space-Lift system is a fully engineered lift jump system intended for external elevated concrete forming applications. It is intended to be used with any Symons gang form that can utilize Versiform® walers such as Aluminum Beam Gangs, Steel-Ply®, Sym-Ply®, Flex-Form®, and H20 wood beam gangs.

IMPORTANT: Space-Lift is an extremely versatile formwork accessory. Gang heights up to 16' with a frame spacing of 10' or more are possible IF conditions allow. Only a qualified engineer who recognizes all the specific loading and design limits can determine if Space-Lift is right for your application. Always lay out Space-Lift in accordance to drawings supplied by Symons or an approved Symons technical representative.

The system consists of the Space-Lift Carriage Assembly, Space-Lift Frame Legs with horizontal double pin connectors welded on both ends, and the Space-Lift Frame Diagonal. The gang form and its wall brace are mounted to the Space-Lift Carriage which allows the form to be retracted up to 35 inches (89 cm) from the face of the previously cast concrete. The whole Space-Lift assembly is suspended from Jump Shoes that are bolted to the previous concrete lift.

The design of the Space-Lift to Jump Shoe connection also allows for use on curved wall applications down to a 11'-0" (335 cm) radius.

The above features, combined with a spacing of up to ten feet (304 cm) provides a wide work platform, using deck joists up to 8" deep, to allow for stripping, reworking, and preparation of the forms to proceed without the assistance of a crane.

Since the form and platform unit are hoisted as one and landed into previously mounted Jump Shoes, no one has to ride the unit while the resetting operation takes place. The crane has to be attached to the Space-Lift only while the Lift Locks are released, the system is hoisted and landed, and the Lift Locks are reset. The above resetting operation typically takes well under 10 minutes from start to finish.

When properly anchored, Space-Lift applications are designed to withstand wind conditions up to 120 mph (193 km/hr) or to support platform loads up to 50 lb/sq ft (245kg/sq meter) with a 35 mph (56 km/hr) wind. This high load capacity allows for reinforcement installation and general carpenter activities to be performed from the Space-Lift platform. The Space-Lift platform is not intended for the storage of rebar or any other construction materials.

With all the activity described previously taking place on the work platform of the system, the form never needs to be lowered to the ground or stored elsewhere on the project.

Additional features of the Space-Lift System are the quick assembly design, consisting of all pin connections, the above deck Lift Lock, the Carriage Lock, which allows positioning of the gang anywhere within its travel limits, and multi-use Access Walkway Bracket and Guard Posts. Additional Frame Legs and Access Walkway Brackets and Guard Posts are designed to be attached easily with pins and allow the following operations to take place without additional scaffolding:

- Convenient Jump Shoe removal as construction proceeds upward.
- Access to the Tieback Connector, which is typically installed at the previous Jump Shoe location. Tiebacks are required to eliminate the possibility of wind overturning the form.
- Patching, sacking, and post-tensioning operations can be preformed from the trailing platform.

For ease of handling and to minimize crane hook capacity, the gang width is normally limited to the amount of form and platform that can be supported by two Space-Lift assembled units.

IMPORTANT: Never assemble the gang form to the Space-Lift as one unit on the ground. Lifting this combination may induce excessive stress on the Carriage/Waler Bracket and Pier Cap Brace which are intended for vertical load only!

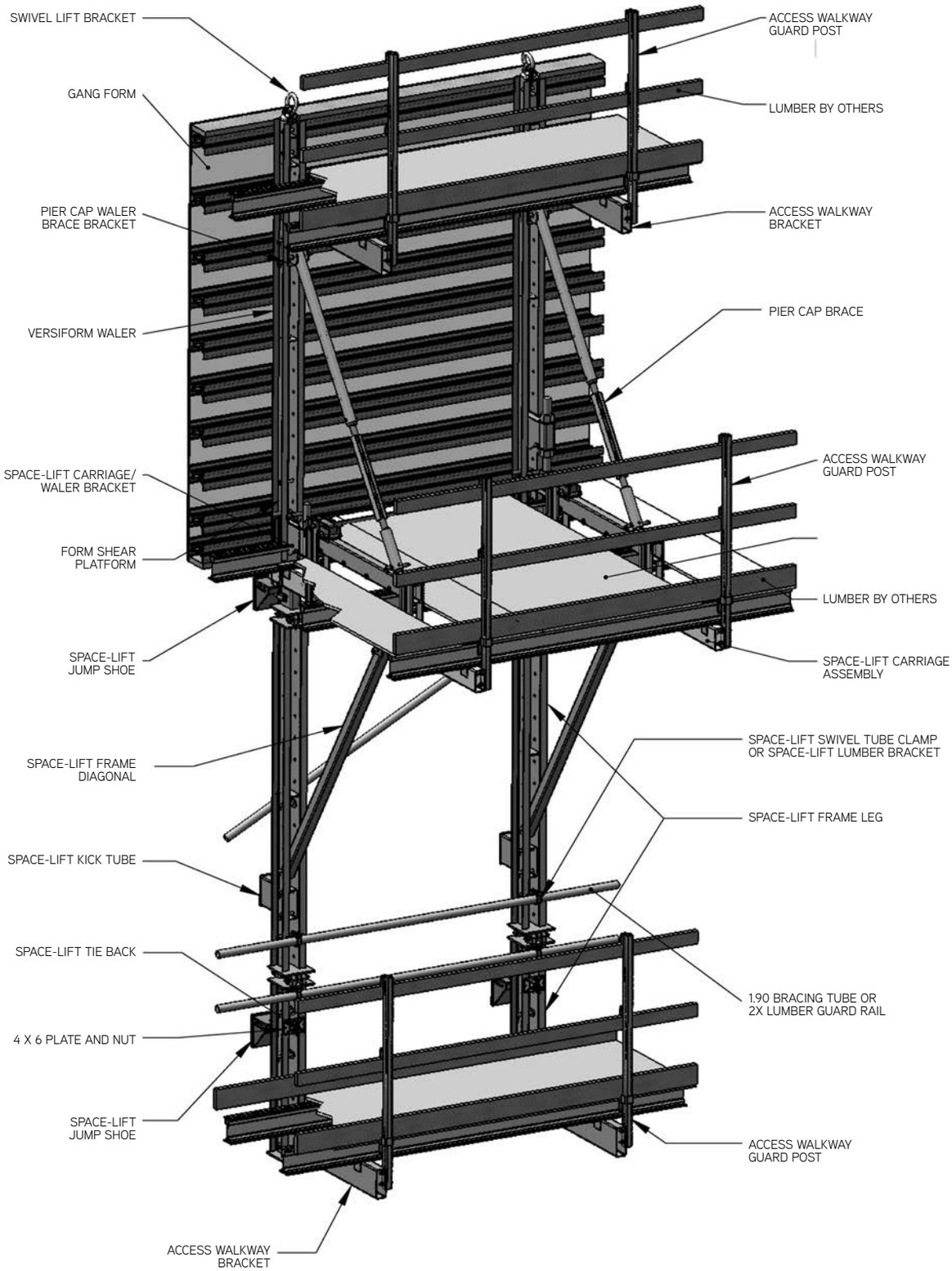

FIG. 1
Space-Lift Basic Components

SPACE-LIFT™ SYSTEM COMPONENTS

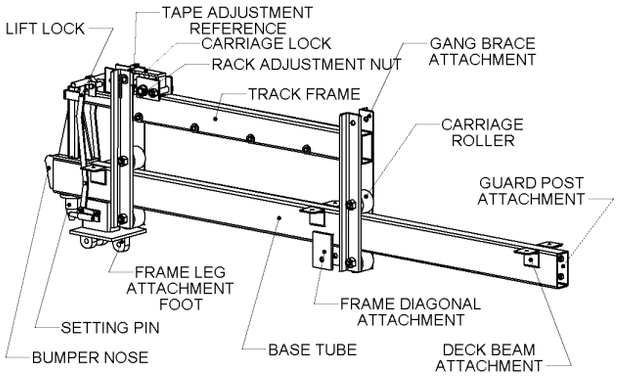

FIG. 2
Space-Lift Carriage Assembly
(P.C. F51215)

The Space-Lift Carriage Assembly (Fig. 2) consists of two main parts, the Base Tube and the Track Frame. The Base Tube provides support for the Track Frame and work platform and includes the Setting Pin. The Setting Pin, located at the front of the Carriage Assembly, engages a slot in the Jump Shoe and attaches the Space-Lift Assembly to the Jump Shoe. The Bump Nose provides alignment of the Setting Pin into the slot in the Jump Shoe. The Track Frame is permanently attached to the Base Tube and these two assemblies are shipped as the Carriage Assembly. The Base Tube has an Extension Attachment Foot which is used to attach the Space-Lift Frame Leg using ¾" diameter pins. The Base Tube has a Lift Lock which prevents possible up-lift of the units when in use. The Lift Lock is accessible from the work deck and is designed to be easy to check from this position.

The Track Frame is attached to the Base Tube by capturing it between its rollers. It has a Carriage Lock which allows the Track Frame to be locked any place along its allowable travel. This provides easy adjustment for the center of gravity when flying the units. The gear rack on the Track Frame has an attached tape measure on both sides to help workers prevent racking of the gang as it is moved forward or rearward. The Track Frame is moved via the Rack Adjustment Nut using a ratchet wrench and socket or an open end wrench.

MAINTENANCE NOTE: The Track Frame has a tooled rack and pinion. To ensure long life and safe operation, the rack should be inspected and greased prior to operation and before storage or return to inventory.

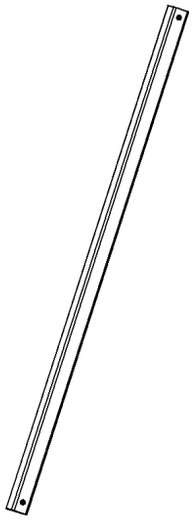

FIG. 3
Space-Lift Frame Diagonal
(P.C. F51239)

The Space-Lift Frame Diagonal (Fig. 3) is a 3" x 3" tube with ⅞" diameter holes at each end to accept a ¾" diameter pin. The Space-Lift Frame Diagonal attaches to the Carriage Assembly and terminates at the bottom between the channels of the Space-Lift Frame Leg.

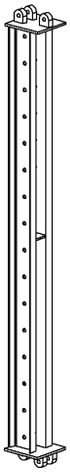

FIG. 4
Space-Lift Frame Leg
(4'-0" - P.C. F51304)
(8'-0" – P.C. F51308)
(10'-0" – P.C. F51310)

The Space-Lift Frame Leg (Fig. 4) consists of 6" channels with welded end plates and gussets. The end plates have connection studs with 13⁄16" diameter holes to receive two ¾" pins to allow connection to the Carriage Assembly or another Frame Leg. The channels have 13⁄16" diameter holes at six inch centers to accept ¾" diameter pins for various connections (i.e. the Space-Lift Frame Diagonal).

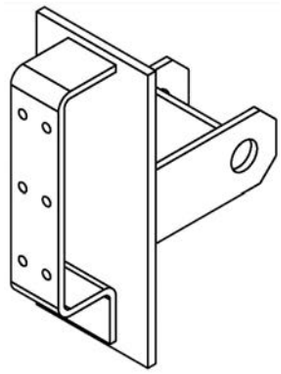

FIG. 5
Space-Lift Lumber Bracket
(P.C. F51368)

The Space-Lift™ Lumber Bracket (Fig. 5) is attached to the Space-Lift Frame Leg using on 3/4" diameter pin. It can be used in place of the Space-Lift Swivel Tube Clamp (Fig. 9) when using 2x lumber for horizontal and diagonal bracing..

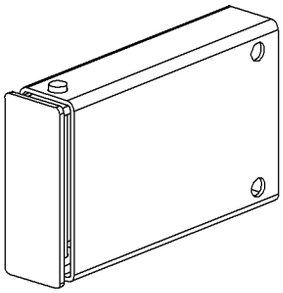

FIG. 6
Space-Lift Kick Tube
(P.C. F51235)

The Space-Lift™ Kick Tube (Fig. 6) is placed between the channels of the first Space-Lift Frame Leg, just below the pin location of the Space-Lift Frame Diagonal. The Kick Tube spaces the Frame Leg off of the wall at a distance that keeps the Frame Leg parallel to the wall and transfers the load transmitted through the Frame Diagonal to the wall.

Installation is through the two 13⁄16" diameter holes with two ¾" diameter pins. The Kick Tube nose is designed to swivel left and right when used on curved walls.

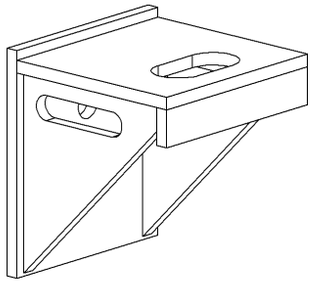

FIG. 7
Space-Lift Jump Shoe
(P.C. F51236)

The Space-Lift Jump Shoe (Fig. 7) is the main support for the Space-Lift system. The Jump Shoe is bolted to the wall with a special one inch diameter contour threaded grade 5 bolt screwed into a F-56 Dayton anchor. The Jump Shoe has slots in the side plates to provide an easy handhold for installation and removal. These slots can also be used to provide a safety connection to the Space-Lift frame legs, via a heavy duty bungee cord, to aid during the Jump Shoe removal process.

A Metal Setback Cone presets the anchor one inch back from the concrete face and provides additional support for the bolt. The Jump Shoe is designed with a slot to accept the setting pin from the Space-Lift Carriage Assembly. This allows the Space-Lift to be used easily on curved wall applications. (See Fig. 46 for anchor and bolt information.)

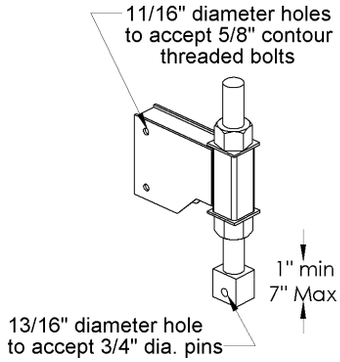

FIG. 8
Space-Lift Carriage/Waler Bracket
(P.C. F51232)

The Space-Lift Carriage/Waler Bracket (Fig.8) is the connection between the Space-Lift and the gang form. The two 11⁄16" holes are use to bolt the Carriage/Waler Bracket to a 5" Versiform® Waler and the 13⁄16" hole is used to pin to the Space-Lift Carriage Assembly with a ¾" pin. The ¾" pin connection allows the Carriage/Waler Bracket, with the gang attached, to tilt as required. The Carriage/Waler Bracket provides six inches of adjustment.

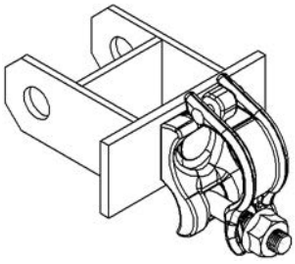

FIG. 9
Space-Lift Swivel Tube Clamp
(P.C. F51231)

The Space-Lift Swivel Tube Clamp (Fig. 9) is attached to the Space-Lift Frame Leg using one ¾" diameter pin. The Space-Lift Swivel Tube Clamp will accept a tube from 1.69" to 2" diameter. The tubing acts as both horizontal and diagonal bracing and as trailing platform interior guard rails.

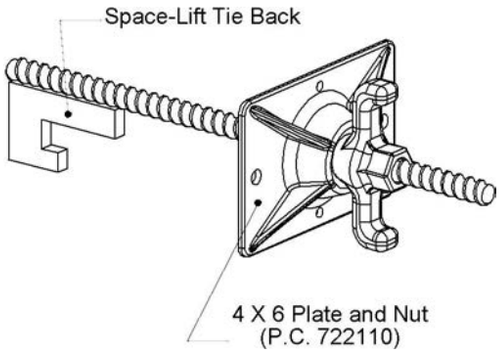

FIG. 10

Space-Lift Tie Back
(4 x 6 Plate and Nut separate)
(P.C. F51237)
with
4 x 6 Plate and Nut
(P.C. F722110)

The Space-Lift Tie Back (Fig. 10) is used to prevent rotation of the Space-Lift and gang assembly from forces applied to back side of the gang. The Tie Back passes through the lower Space-Lift Frame Leg (Fig. 4) and hooks into the slot in the lower Jump Shoe (Fig. 7). The nut then tightens the plate against the channels of the Frame Leg preventing movement away from the shoe.

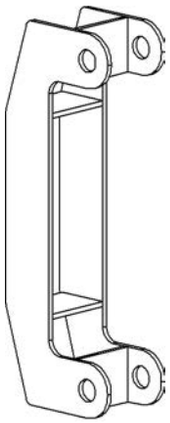

FIG. 11
Space-Lift Tie Back Bumper
(P.C. F51221)

The Space-Lift Tie Back Bumper is pinned to the trailing Frame Leg just above and below the bottom Jump Shoe location using the ¾" Fast Pins. The Bumper assures that the correct spacing is maintained between the trailing Frame Leg and the Jump Shoe.

SPACE-LIFT SYSTEM ACCESSORIES

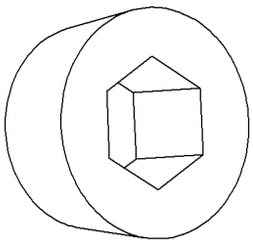

FIG. 12
Metal Setback Cone
(P.C. F51399)

The Metal Setback Cone (Fig. 12) is placed between the concrete side of the plywood face and the F-56 two strut concrete anchor with the larger diameter of the Cone against the plywood face. The Cone makes the Anchor setback (1") one inch from the concrete face. The purpose of the Metal Setback Cone is to eliminate the possibility of bending being induced in the (1") one inch diameter Anchor bolt which could cause concrete break-out (see Figs. 46 and 47).

FIG. 13
Swivel Lift Bracket
(P.C. F51200)

The Swivel Lift Bracket (Fig. 13) is designed to bolt between the channels of a standard Versiform® waler using (2) two ⅝" x 6" long contour threaded bolts with double nuts. The swivel mount can rotate 360˚ degrees and the loop can rotate more than 180˚ in a horizontal plane. The Swivel Lift Bracket is limited to 4,000 lbs with a factor of safety of 5 to 1.

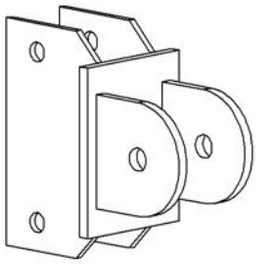

FIG. 14
Pier Cap Waler Brace Bracket
(P.C. F51209)

The Pier Cap Waler Brace Bracket (Fig. 14) attaches to a 5" Versiform® waler using two standard ⅝" diameter pins and hair pin clips. The Pier Cap Brace™ attaches to the Bracket using a ¾" diameter Fast Pin.

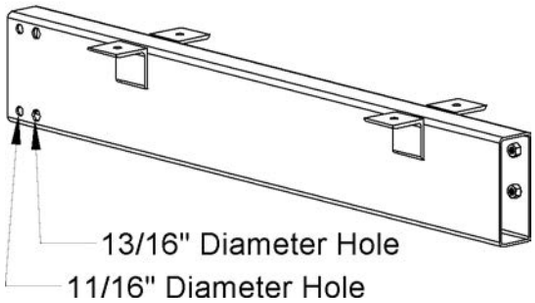

FIG. 15
Access Walkway Bracket
(P.C. F51242)

The Access Walkway Bracket (Fig. 15) is a multi-system walkway bracket that can be used with a 5" Versiform waler using ⅝" pins and hairpin clips, or the Space-Lift™ Frame Leg using ¾" Fast Pins. It provides a walkway width of 43¾" when used with the 6" deep Space-Lift Frame Leg, and a 46" walkway width when used on a 5" Versiform waler. The angles welded to the sides provide attachment locations for various beams or joists. The two welded nuts on the inside end of the tube is the attachment location for the Access Walkway Guard Post (Fig. 15) using two ½" diameter x 3½" long Grade 5 bolts.

FIG. 16
Access Walkway Guard Post
(P.C. F51243)

The Access Walkway Guard Post (Fig. 16) is used with the Space- Lift Carriage Assembly (Fig. 2) and the Access Walkway Bracket (Fig. 14). The connection is two ½" diameter x 3½" long grade 5 bolts. The top two lumber pockets can accept up to 2 x 6s while the sliding toe board bracket will accept any 2 x lumber.

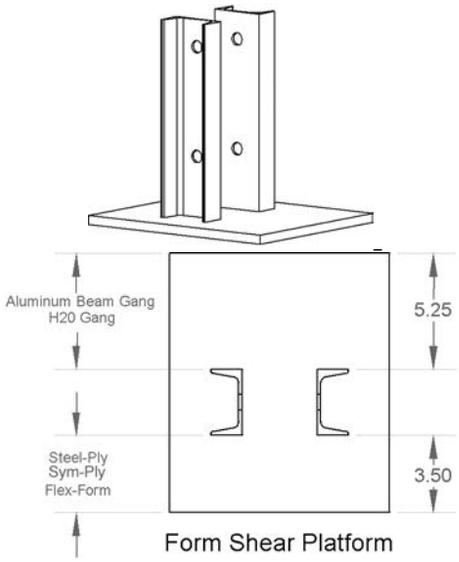

FIG. 17
Form Shear Platform
(P.C. F51240)

The Form Shear Platform (Fig. 17) is used on 5" Versiform vertical walers in gang forming to support the gang on the lifting walers. The Form Shear Platform is reversible with one lip longer than the other to allow its use with almost all types of gangs. It attaches to the bottom of the 5" waler using two ⅝" x 6" contour threaded bolts and double nuts.

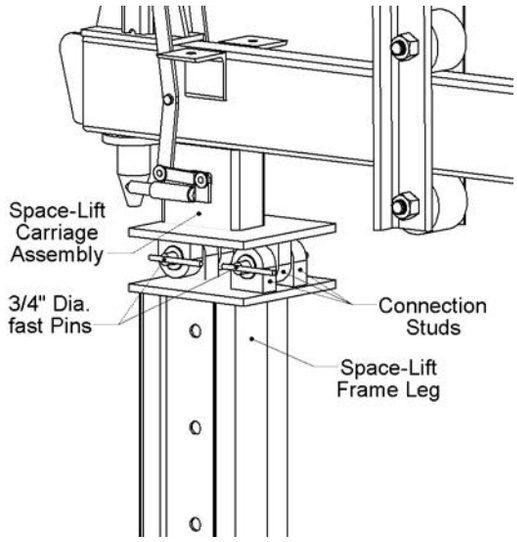

FIG. 18

The main connection between the Space-lift Carriage Assembly (P.C. F51215) and the Space-Lift Frame Legs (Fig. 18) or two Space-Lift Frame Legs to each other (Fig. 19) are two ¾" diameter Fast Pins (P.C. F51396) passing horizontally through the connection studs. This makes assembly and disassembly fast and easy with no tools required.

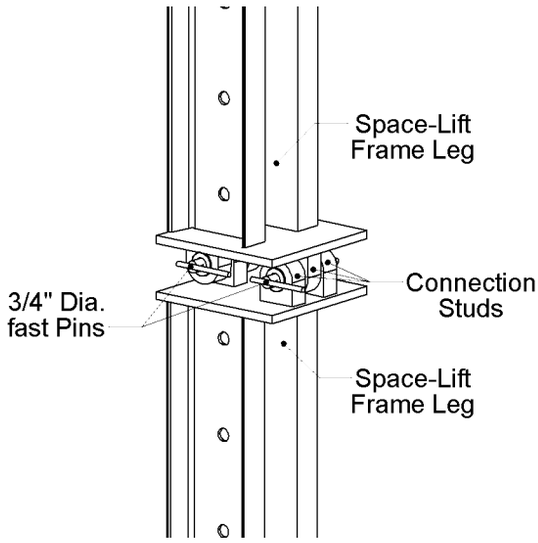

FIG. 19

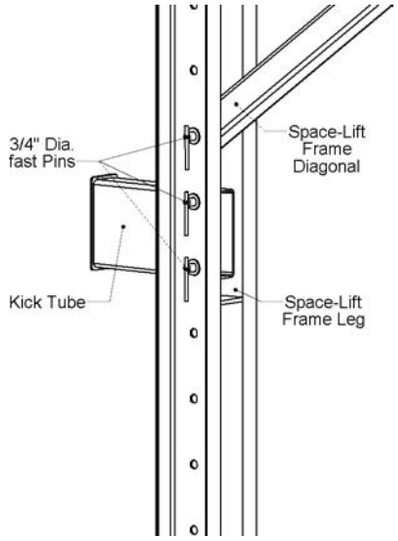

FIG. 20

The connection of the Space-lift Frame Diagonal (P.C. F51239) (Fig. 20) and the Space-Lift Frame Leg is a single ¾" diameter Fast Pin. The other end is pinned to the Space-Lift Carriage Assembly (P.C. F51215) at the tabs as shown in Fig. 21. The Kick Tube (P.C. F51235), which is located at the first open holes in the Frame Leg below the diagonal, uses two of the ¾" Fast Pins (P.C. F51396).

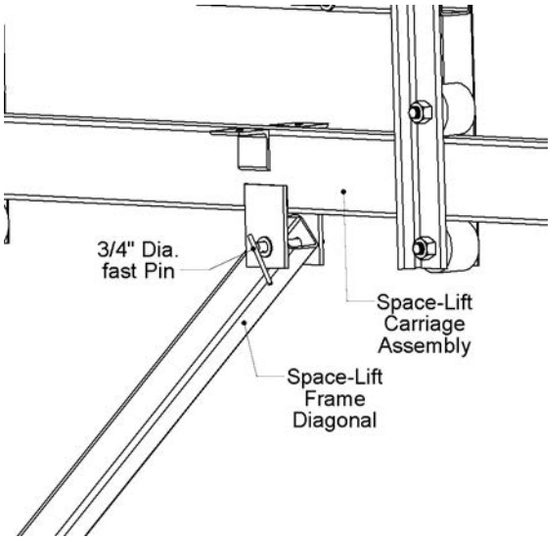

FIG. 21

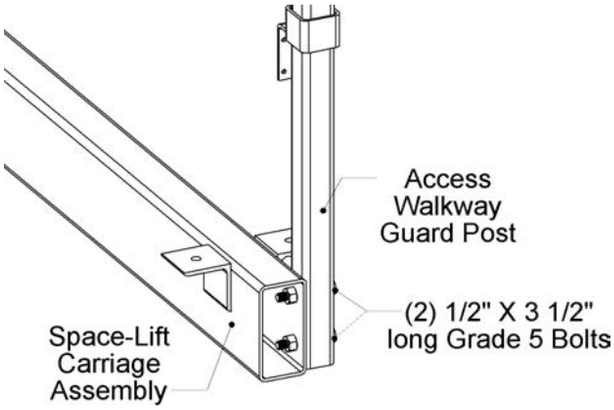

FIG. 22

The Access Walkway Guard Post (P.C. F51243) (Fig. 22) attaches to both the Space-Lift Carriage assembly (P.C. F51215) and the Access Walkway Bracket (P.C. F51242) in the same manner using two ½" x 3½" long grade 5 bolts (P.C. F31630) fed through the tube into a pair of welded nuts.

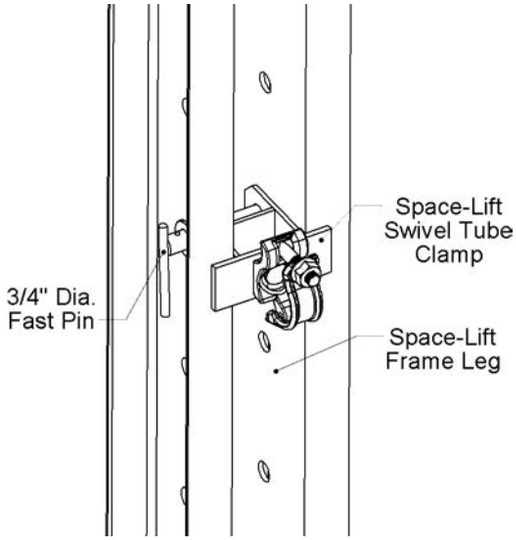

FIG. 23

The Space-Lift™ Swivel Tube Clamp (P.C. F51231) (Fig. 23) has a 1.69" clamp unit that can accommodate either 1.69", 1.90", or 2" tube. The Clamp attaches to the Space-Lift Frame Leg with a single ¾" diameter Fast Pin at any available hole for either diagonal or horizontal bracing or guardrail locations. A Lumber Bracket (PC F51368) may be used with a 2x lumber Guardrail instead of steel pipe.

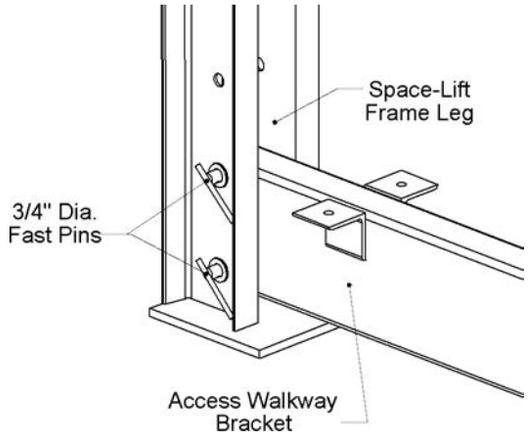

FIG. 24

The Access Walkway Bracket (P.C. F51242) (Fig. 24) attaches to both a Space-Lift Frame Leg and a Versiform Waler. The connection to the Frame Leg uses two ¾" diameter Fast Pins (P.C. F51396) through the 13⁄16" diameter holes while the connection to the Versiform waler is with two ⅝" diameter x 4½" Coupling Pins (P.C. F40132) and two Hair Pin Clips (P.C. F36653) using the 11⁄16" diameter holes.

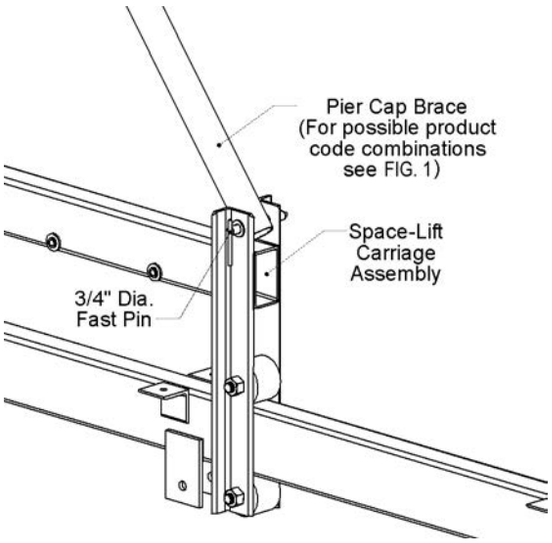

FIG. 25

The Pier Cap Brace connects on one end (Fig. 25) to the Space-Lift Carriage Assembly (P.C. F51215) using a ¾" diameter Fast Pin (P.C. F51396) and to the Pier Cap Waler Brace Bracket (P.C. F51209) on the other end (Fig. 26) using the same Pin. The Pier Cap Brace provides a method for tilting the gang form during the stripping process and braces the gang to prevent overturning in high winds or during movement.

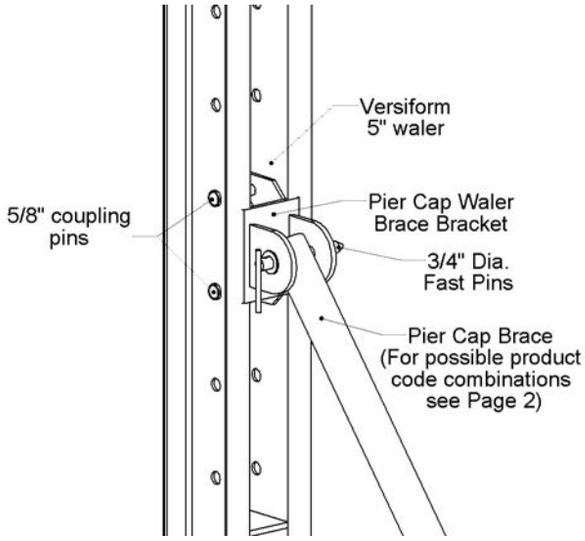

FIG. 26

The Pier Cap Waler Brace Bracket (P.C. F51209) (Fig. 26) attaches to a Versiform waler using two ⅝" diameter Coupling Pins (P.C. F40132) and Hair pin clips (P.C. F36653). The Brace Bracket has several benefits. Using the Brace Bracket allows the Pier Cap Brace to hang down directly from the waler attached to the gang form. This allows the Brace to stay with the gang. The Brace Bracket also simplifies the connection of the Brace to the waler where gussets or attached items cause interference for diagonal attachment.

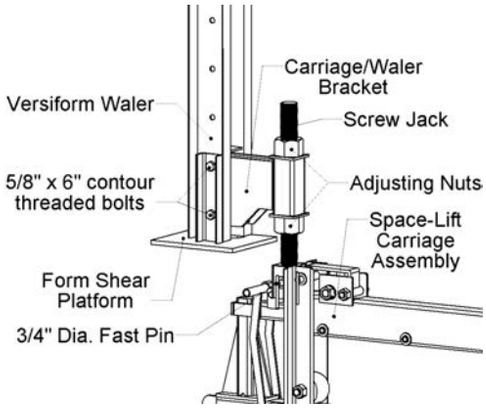

FIG. 27

The Carriage/Waler Bracket (P.C. F51232) is the connection between the Space-Lift and the gang form via the Versiform Waler. Use two ⅝" x 5" contour threaded bolts (P.C. F33778) to connect to the Waler. Each bolt will pass through the Form Shear Platform (P.C. F51240) and should be double-nutted using the ⅝" diameter contour threaded nut (P.C. F36085) to assure a positive connection. The Carriage/Waler Bracket is attached to the Space-Lift Carriage Assembly with a ¾" diameter Fast Pin (P.C. F51396).

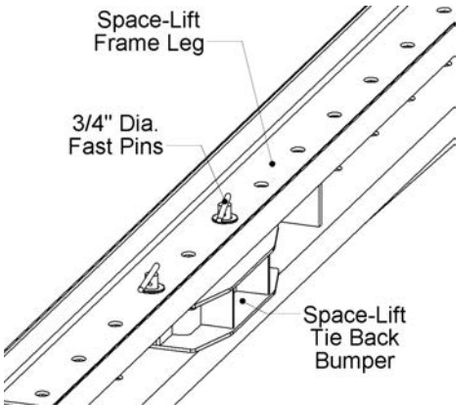

FIG. 28

The Space-Lift Tie Back Bumper is pinned to the trailing Frame Leg just above and below the bottom Jump Shoe location using two ¾" Fast Pins. The Bumper should be pinned facing the back or wall side of the Frame Leg. The Bumper is tapered on both ends to ensure it doesn't hang-up on the Jump shoe during placement and assures that the correct spacing is maintained between the trailing Frame Leg and the Jump Shoe.

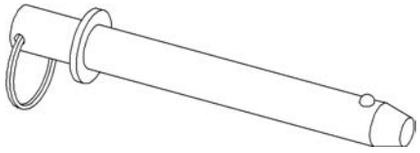

FIG. 29
¾" Fast Pin
(P.C. F51396)

The ¾" diameter Fast Pin (P.C. F51396) connects almost all major parts. This eliminates the need for large quantities of bolted connections saving time during assembly and tear down. The pin has a ball lock which eliminates the need for hair pin clips to secure the pin in position, making them fast and easy to use. The pin may have either a pull ring or a "T" type pull.

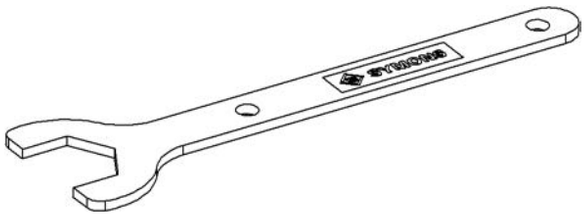

FIG. 30

The Carriage/Waler Wrench (P.C. F51367) is a steel wrench made for the Carriage/Waler adjusting screw nut (3⅛" across the flats). It has two 13⁄16" holes which allow it to be pinned, for storage, between the channels of any 5" waler or Space-Lift leg.

SPACE-LIFT™ ASSEMBLY TOOLS

Required Tools Specific to Space-Lift:

2" Diameter Gang Form Adjusting Screw — 3⅛" Open end Carriage/Waler wrench (P.C. F51367) or equivalent. See Fig. 29

1" Diameter Carriage Adjustment Nut — Ratchet wrench with at least a 24" long handle and a 1½" socket or 1½" box wrench, open end wrench or an equivalent adjustable wrench. 2 are required to roll back a gang form. (Ratchet recommended)

1" Diameter Anchor Bolt — 1½" socket or 1½" box wrench or open end wrench

¾" Diameter Bolts — Ratchet wrench with 1⅛" socket or 1⅛" box wrench or open end wrench or an equivalent adjustable wrench.

½" Swivel Tube Clamp Nut — Ratchet wrench with ⅞" socket or ⅞" box wrench, open end wrench or an equivalent adjustable wrench.

General Gang Form Tools:

1⁄16" Drill for anchor hole in form

⅝" Contour Threaded Bolt and Nut — Ratchet wrench with 15⁄16" socket or 15⁄16" box wrench, open end wrench or an equivalent adjustable wrench.

Pre-cut wood for assembly of (1) unit:

(1) - 78" long 4 x 4

(1) - 18" long 4 x 4

(2) - ½" x 12" x 12" pads

SPACE-LIFT ASSEMBLY INSTRUCTIONS

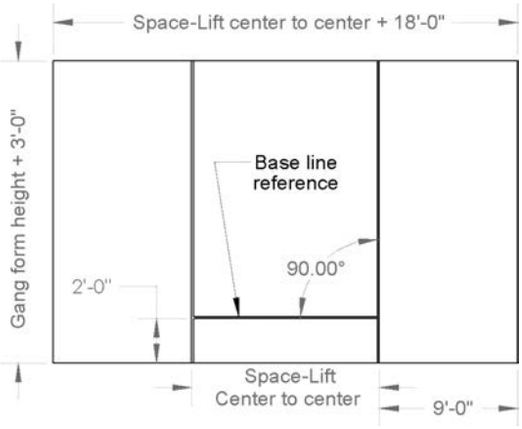

Work area layout

Prepare a flat level area about eighteen feet wider than the center-to-center dimension of the Space-Lift assembly to be built, and three feet longer than the tallest gang form to be built.

Establish a base line with squared off sidelines spaced to the center to center distance of the Space-Lift assemblies.

The Space-Lift assembly procedure can take place in the work area such that the Space-lift Kick Tube lays along one of the center lines with the assembly facing outward of the center line. The first assembled frame can be tipped up and temporarily braced while the second unit is built (see Fig. 38).

> **NOTE:** The above is a suggestion only. The Space-Lift may be assembled at a different location and moved to the jump form assembly location when needed. If so, the work area width can be reduced to 12'-0"

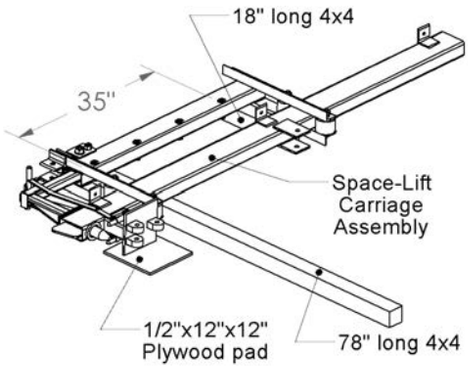

FIG. 31

Place 78" and 18" long 4x4s parallel to each other, about 35" apart. Place the Space-Lift Carriage Assembly on the 4x4s so that it lies level, then slide a ½"x12"x12" plywood pad under the Frame Leg Attachment Foot.

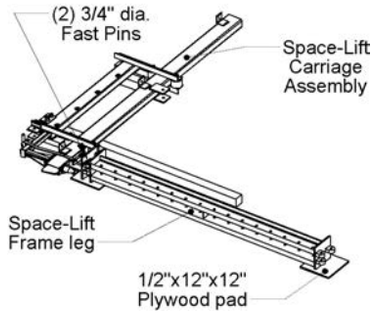

FIG. 32

Place the required length Space-Lift Frame Leg on the 12" x 12" plywood pad with the opposite end resting on an additional 12" x 12" plywood pad. Connect the Frame Leg to the Frame Leg Attachment Foot using two ¾" diameter pins (see Fig. 18).

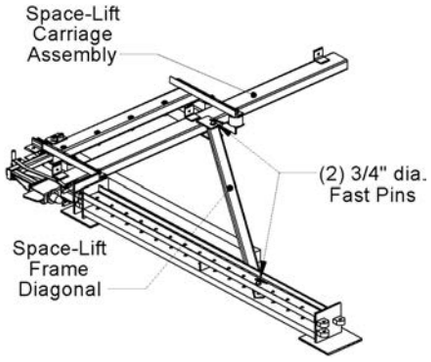

FIG. 33

Place the Space-Lift Frame Diagonal between the channels of the Space-Lift Frame Leg and the tabs on the Space-Lift Carriage Assembly, and pin the connection using two ¾" diameter pins (see Figs. 20 and 21).

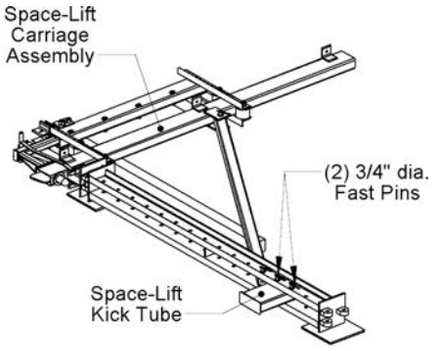

FIG. 34

Place the Space-Lift Kick Tube between the channels of the Space-Lift Frame Leg with the top hole at the first available hole below the Space-Lift Frame Diagonal, and pin the connection using two ¾" diameter pins (see Fig. 20).

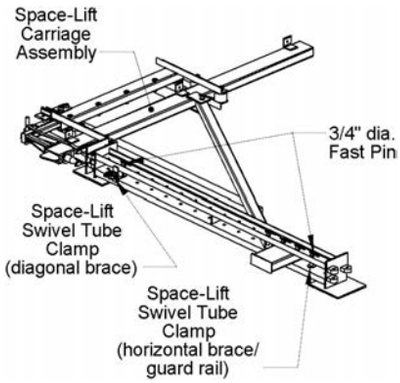

FIG. 35

Place the Space-Lift Swivel Tube Clamp used for diagonal bracing between the channels of the Space-Lift Frame Leg on the wall side, in the hole locations as specified on the layout. Pin the connection using a ¾" diameter pin for each Swivel Clamp. Place the Space-Lift Swivel Tube Clamp used for guard rail/horizontal bracing attachment on the outside of the Space-Lift Frame Leg in the hole locations as specified on the layout. Pin the connection using a ¾" diameter pin for each Swivel Clamp (see Fig. 23).

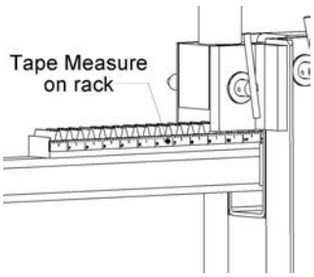

FIG. 36

NOTE: It is recommended that the Track Frames on all assemblies be set at the 12 inch mark as referenced on the Rack Tape Measure (see Fig 36). This provides a location on the Base Tube for slings used on the first pick.

Check that all ¾" Pins are fully seated and the Carriage Lock is closed and pinned before moving the assemblies (see Fig. 2 for location of Carriage Lock).

The Space-Lift assembly is now ready to be braced to another assembly to make a Space-Lift jump form.

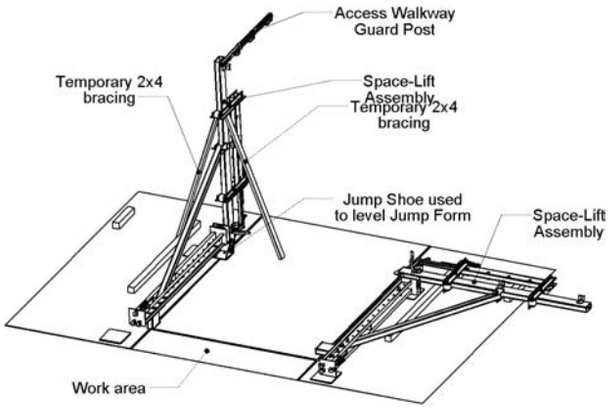

FIG. 37

The Access Walkway Guard Post (P.C. F51243) attaches to the side of the Base Tube of the Space-Lift™ Carriage Assembly (P.C. F51215) as shown in Figs 37 and 21. If the attachment side of the Guard Post is face up, the Guard Post may be attached before tilt up otherwise it should be attached after the Space lift Assembly is tipped up to the braced position.

Attach the Access Walkway Guard Post to the end of the Space-Lift Carriage Assembly using two ½" diax3½" Grade 5 bolts (P.C. F31630).

To provide a more stable base and to keep the Space-Lift Assembly level it is recommended that a Space-Lift Jump Shoe (P.C. F51236) be used temporarily during the assembly process. Place the Jump Shoe as it would be used when hanging the Jump Form system with the setting pin going through the slot in the Jump Shoe.

Tip up one of the Space-Lift Assemblies and brace temporarily as show in Fig. 37. Center the assembly along the reference center line and set the bottom edge along the base line.

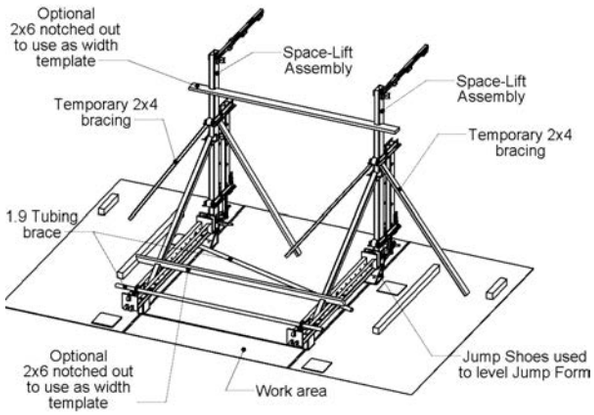

FIG. 38

Tip the second Space-Lift Assembly upright and position on the center line reference. This is made easier if the "optional width template" is used. With two notches 3⅛" wide and 2½" deep, cut in a 2x6, on the same centers as the Space-Lift Assemblies, simply capture the diagonal and the base tube as shown in Fig. 38. Adjusting to the base line should make the units square and true however checking with diagonal measure is always recommended.

The 1.90 tubing braces can now be attached to the Space-Lift Swivel Clamps. The 1.90 diagonal brace can be attached on outside (top) or the wall side (bottom) of the Frame Legs while the horizontal brace/guardrail should be installed* on the outside (top) of the Frame Legs.

The 1.90 tubing is a standard product cut to length per job requirements based on the gang width (lower interior guard rails) and diagonal brace length requirement.

NOTE*: In some cases, the 1.90 horizontal tubing will be too high on the Jump Form to act as a guard rail once the trailing Frame Legs are attached. In this case, the 1.90 tubing becomes a brace only and can be attached on either side of the assembly.

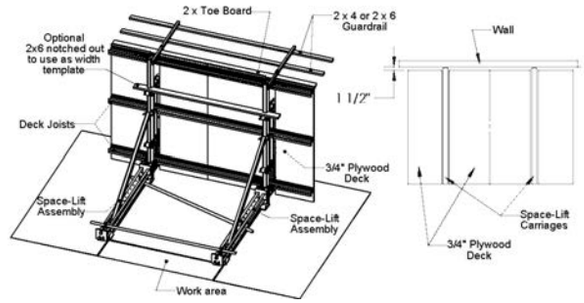

FIG. 39

Leaving the "Optional width template" resting on the rollers of the Track Frame helps keep the Space-Lift Assemblies vertical and spaced properly for the addition of the deck joists, however, the Space-Lift Assemblies should always be check diagonally to ensure squareness. The deck joists are attached using lag bolts or bolts and tee nuts through the holes in the angles of the Carriage assembly depending on joist type shown on the layout.

Nine foot long plywood (¾" thick and of the required width) is then attached to the joist using nails or deck screws. The Plywood edge that runs along the front of the deck should be 1½" off of the concrete face and the exterior edges should run to the end of the deck joists while the interior edges should be kept approximately ½" away from either side of the Track Frame legs to allow clearance for roll back of the form.

The sliding toe board bracket allows the use of different deck joist heights and accepts 2 x lumber. The guardrail pocket accepts up to 2 x 6 lumber and has holes so the rail can be nailed or screwed to the pocket.

NOTES: Before attachment of the top guardrail, it must be determined if the lifting slings will rotate up toward the top rail during the first lifting operation. This may cause the top rail to be damaged, so it is recommended that the top rail be installed after the initial Space-Lift placement. The top rail may be temporarily screwed to the deck so that it flies with the unit. The Space-Lift is now ready to be moved to the first wall location.

Always be sure that all Fast Pins are fully seated before moving any assemblies.

The following instructions for building the trailing platform are based on the assumption that the bottom Frame Leg of the Space-Lift jump form is too far above the ground for the trailing platform to be built in place.

The preferred method, if the bottom of the jump form is close enough to be reached safely, is to attach the Frame

Legs of the trailing platform directly to the Frame Legs of the jump form and the trailing platform would be built in place (see Fig. 55).

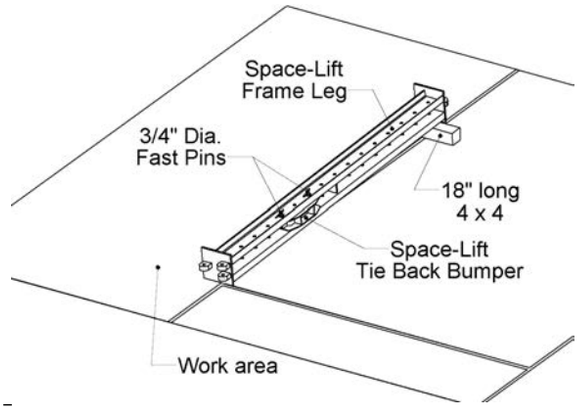

FIG. 40

Begin building the trailing platform assembly by placing the required Space-Lift Frame Leg on its side with one end resting on the 18" long 4x4 from the previous assembly procedure.

Attach a Space-Lift Tie Back Bumper (P.C. F51221) at the location specified on the layout drawing using two ¾" diameter Fast Pins. The Tie Back Bumper must be installed on the concrete side of the Leg (the side opposite the extended end plates).

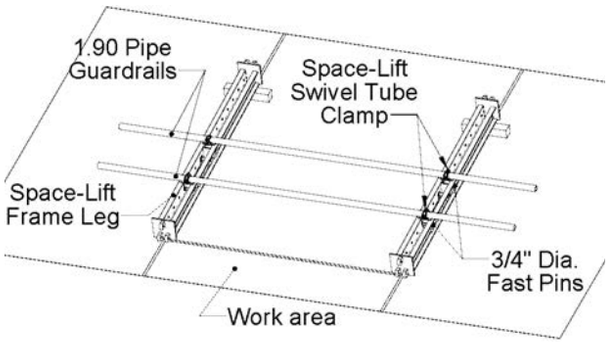

FIG. 41

The Space-Lift Frame Legs can now be rotated so that the Space-Lift Tie Back Bumper faces downward. With the legs still resting on the 4x4s, center the legs to match the spacing of the legs on the main Space-Lift Assembly built previously and square up using diagonal measure. Pin four Space-Lift Swivel Tube Clamps (P.C. F51231) to the locations indicated on the layout drawing using ¾" Fast Pins (P.C. F51396), add the 1.90 pipe guard rails, centering them on the spacing between the legs (see Fig. 23). These will be the guard rails for the trailing platform on the side facing the wall.

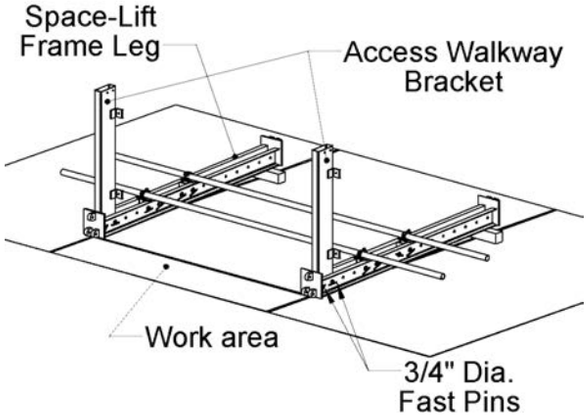

FIG. 42

The Access Walkway Brackets (P.C. F51242) can now be attached to the bottom two holes in the Space-Lift Frame Legs using two ¾" diameter Fast Pins (P.C. F51396) for each bracket (see Fig. 24).

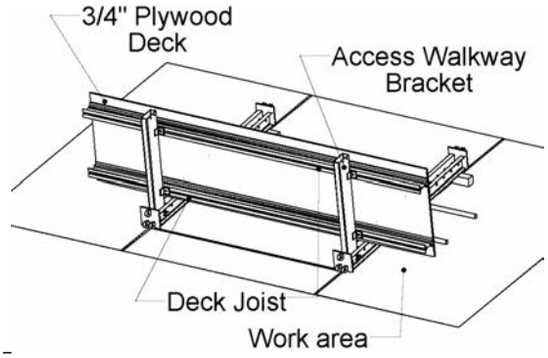

FIG. 43

The deck joists can now be centered and attached using lag bolts or bolts and tee nuts through the holes in the angles of the Access Walkway Bracket. It is recommended to alternate the attachment on either side of the Walkway Bracket when using bolts and tee nuts. Always check assembly for squareness before tightening bolts.

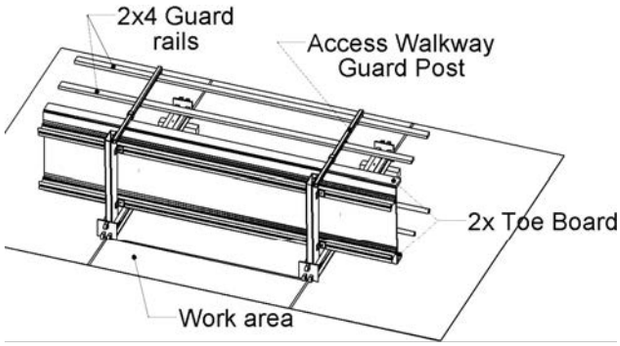

FIG. 44

The Access Walkway Guard Post can now be attached using two ½" x 3½" long Grade 5 bolts (P.C. F31630) (see Fig. 22).

Once the guard posts are installed, the 2x guard rails and a toe board can be attached using nails or screws. The toe board on the pipe guardrail side can be attached with a Beam Attachment Clamp (P.C. F36502) and a ½" lag screw or 16d double-headed nails on the back side bent over the Frame Leg flanges.

The trailing platform can now be moved to a staging loca-tion until it is needed.

NOTE: Always be sure that all Fast Pins are fully seated before moving any assemblies.

Forms should be cleaned and/or oiled before installation of the Set Back Cone and Anchor. It is recommended that these items remain oil free after they have been installed.

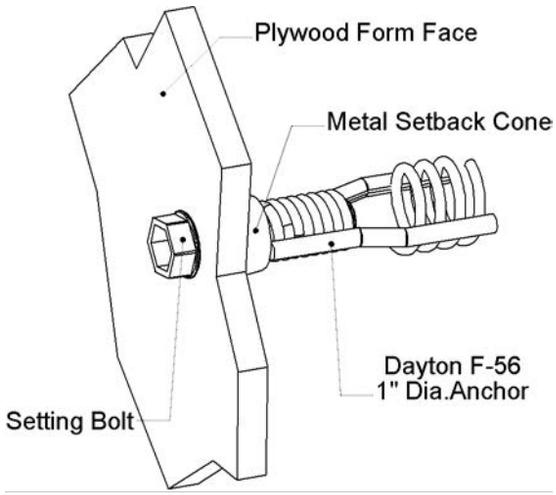

FIG. 45

The anchor used to support the Space-Lift Jump form system is a Dayton F56, 2 strut anchor x 5½" long (P.C. 40547). The anchor is attached to the plywood form face bydrilling a $1\frac{1}{16}$" diameter hole in the form face at the location indicated on the layout drawing. Then insert a 1" diameter x 5" B14 coil bolt also called the setting bolt (Part#: 125699) through to the concrete side of the form. A Metal Setback Cone (P.C. F51399) is placed over the bolt, with the larger diameter side against the plywood face, and then the F56 anchor is screwed on the bolt until it is snug against the Setback Cone.

NOTES: When using plywood-faced forms, the anchor bolt cannot be used as a setting bolt as the setting bolt has a longer length to prevent the anchor bolt from bottoming out when installed.

When using steel faced forms (i.e. Flex-Form®) the 4" anchor bolt should be used as the setting bolt.

LOAD NOTE: To develop the required load ca-pacity, the Dayton F-56 anchor is designed to be used in 3,000 PSI concrete with a minimum wall thickness of 8".

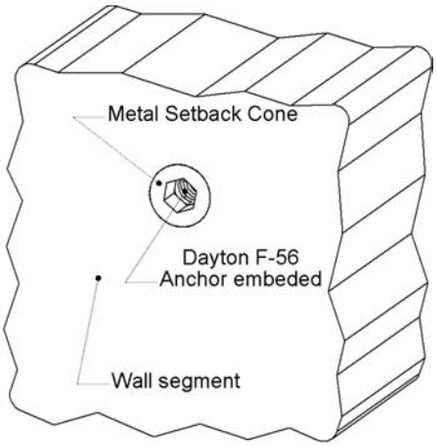

FIG. 46

Figure 46 shows the Metal Setback Cone (P.C. F51399) in place in the wall after the forms have been removed. It must remain in place when the Space-Lift Jump Shoe (P.C. F51236) is bolted to the wall. The Metal Setback Cone can be removed and reused when the Jump Shoe is removed to be used in the next location.

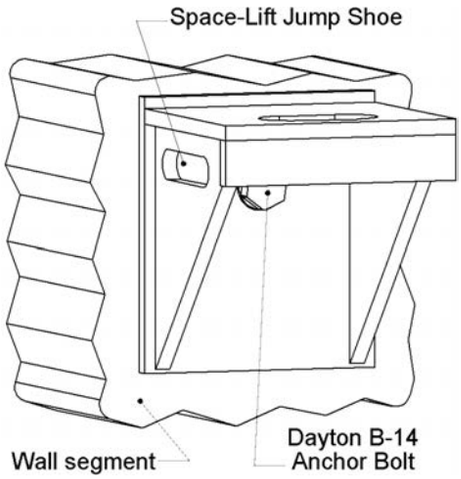

FIG. 47

The Space-Lift Jump Shoe (P.C. F51236) is installed by bolting to the wall with a 4" long Dayton B14 Coil Anchor Bolt (P.C. 125698). The Metal Setback Cone must be in place prior to installation. Hand tighten the B14 Coil Anchor Bolt until snug, then tighten one half turn with a wrench.

NOTES: NO substitution of the B-14 Coil Anchor Bolt is allowed.

The Jump Shoe MUST be kept level during the tightening process.

NEVER use the setting bolt as the anchor bolt except as noted for steel-faced forms.

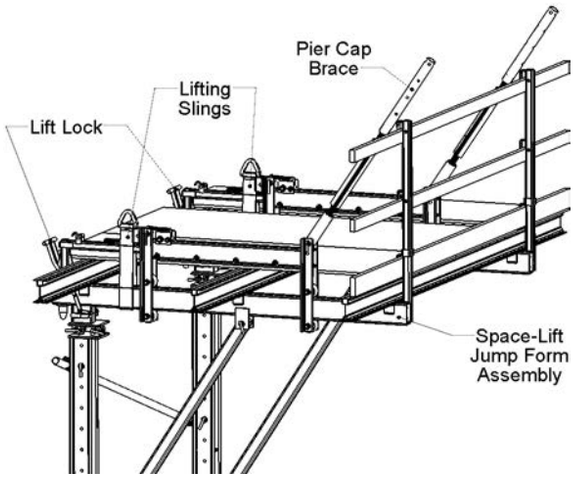

FIG. 48

Prior to the first pick, the bottom half of the Pier Cap braces can be pinned to the Track Frames and flown with the Jump Form Assembly as shown in Figure 48.

The first time the Space-Lift Jump Form Assembly is picked by the crane, there are no Lift Brackets available, so the assembly must be picked as shown in Figure 48. As described in the text following Figure 35, the Track Frames should have been adjusted to the twelve inch mark on the Rack Tape Measure. For the first pick, the slings should pass beneath the Base Tube and up around the Track Frame (Fig. 2). This prevents the slings from damaging the attached plywood in the middle of the unit. (Plywood edge piece has been removed for clarity.) This should place the center of gravity at a point that puts the Space-Lift Assembly in an almost vertical position. If there are other factors that cause the unit to tilt forward or backward, they can be addressed by adjusting the Track Frame. (Moving the Track Frame and the slings further back on the assembly will cause the Bumper Nose (Fig. 2) to move toward the wall and the bottom to move away.)

Once adjusted, note the location of the Track Frame in relation to the Rack Tape Measure for future assemblies.

Lift Lock handles must be in a forward position, approximately even with the bump nose (toward the wall), which pulls the locking pins back for landing in the Space-Lift Jump Shoe (see Fig. 7).

CAUTION: Do not move the handles too far forward or the pins may disengage from the guide tubes.

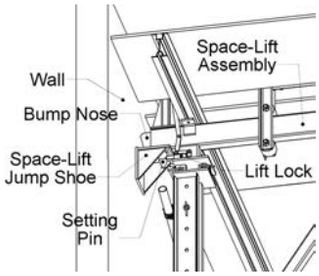

FIG. 49

Landing the Space-Lift jump form requires placing the Setting Pins through the slotted holes in the Space-Lift Jump Shoes. This is made easier with the Bump Nose which guides the pin into the slot in the Jump Shoe when brought in contact with the wall.

Once in the Jump Shoe, the Lift Locks should be engaged to prevent uplift of the assembly. The lock can be engaged from the deck level by pulling the Lift Lock handle back until the flip clasp can capture the handle. This action slides two pins under the Jump Shoe (see Fig. 2).

NOTE: Because the Space-Lift does not yet have trailing walers or a previously placed Jump Shoe that provides a tie back location, the system must be secured in another manner at the bottom to prevent overturning.

One method to secure the system is to kick back to the ground with lumber but the preferred method is to cast an anchor in the first pour at a point below the Kick Tube and at an open location between the channels of the Frame Leg and use a Jump Shoe and the Space-Lift™ Tie Back (P.C. F51235).

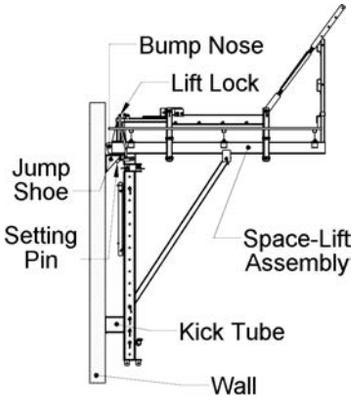

FIG. 50

Figure 50 shows a simplified side view of what is described in the previous text.

The Lift Lock handle is visible at the deck level and the Kick Tube is visible against the wall at the lower end of the Space-Lift Frame Leg.

As an aid to lining up the Setting Pin, from side to side, the pin is painted orange for easier visibility from above or below the Jump Shoe location. In conjunction with the Bump Nose, it makes for fast positioning and setting.

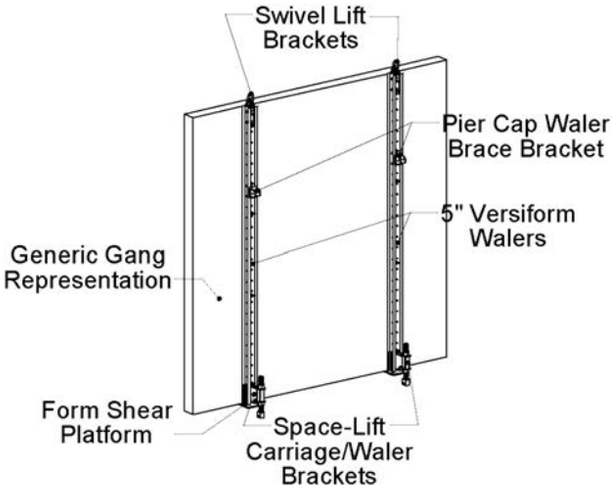

FIG. 51

Figure 51 shows the parts required for a gang used with Space-Lift in combination with a 5" Versiform Waler.

At the top of the waler is the Swivel Lift Bracket (P.C. F51200) bolted with two ⅝" x 6" contour threaded bolts (P.C. F33778) and two contour threaded nuts (P.C. F36085). Below that are the Pier Cap Waler Brace Brackets pinned with ⅝" Coupling Pins (P.C. F40132) and Hair Pin Clips (P.C. F36653) (see Figure 26). At the bottom of the waler are two parts, the Space-Lift Carriage/Waler Bracket (P.C. F51232) and the Form Shear Platform (P.C. F51240). These two parts are bolted through the same holes in the waler, so they must be installed at the same time (see Fig. 27).

RECOMMENDATION: Set the screw adjustment of the Carriage/Waler Bracket in the middle of the adjustment range.

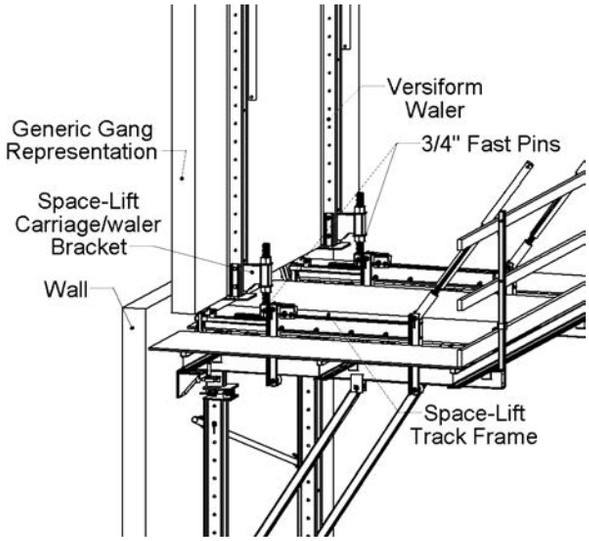

FIG. 52

Once the Space-Lift Jump Form is on the wall, the gang can be flown into place. The gang is first attached with two ¾" Fast Pins through holes in the ears on the Track Frame and the drilled block attached to the Space-Lift Carriage/ Waler Bracket adjusting screw (see Fig. 53).

NOTE: The crane must continue to hold the gang until the Pier Cap braces can be attached.

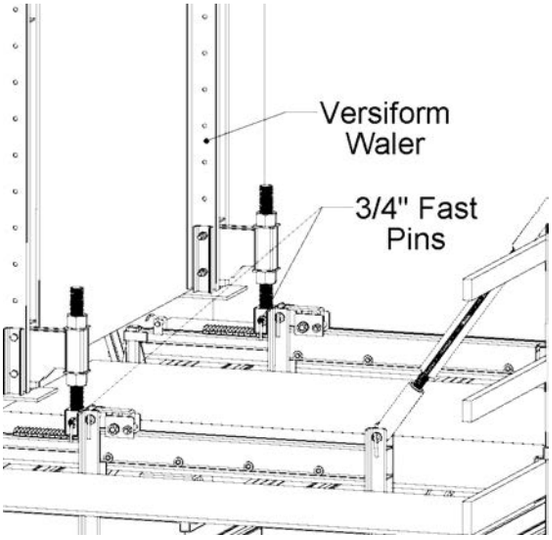

FIG. 53

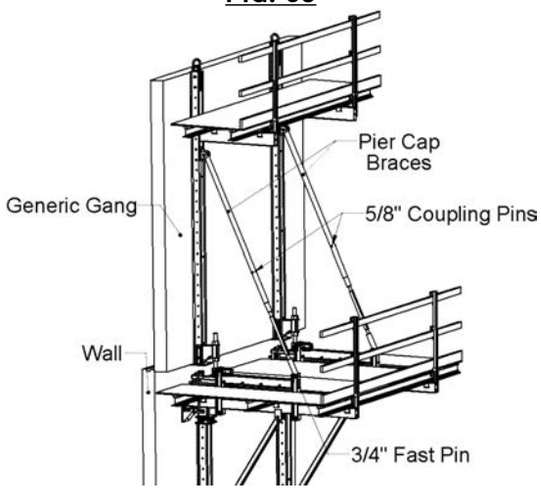

FIG. 54

With the crane still holding the gang, and after pinning the Carriage/Waler Assembly to the ears on the Track Frame, the Pier Cap Braces must be attached. If the turnbuckle end of the brace was previously attached and flown with the Jump form, remove the ¾" Fast Pin and slide the multi-holed end of the turnbuckle in to the end of the Pier Cap extension already attached to the gang. Re-pin the turnbuckle end to the Track Frame and then adjust the turnbuckle until the ⅝" Coupling Pin (P.C. F40132) can be inserted in the hole in the extension and through one of the holes in the turnbuckle end of the brace, or insert the ⅝" pin first and adjust the turnbuckle end of the brace until the ¾" Fast Pin can be inserted in the Track Frame. Finish by inserting the Hair Pin Clips (P.C. F36653) in the Coupling Pins.

The crane may now be released from the gang.

Based on the Jump Shoe location determined on the layout, the bottom of the gang should be about one (1) inch below the top of the previous pour. If this dimension needs to be adjusted, loosen the top nuts of the Carriage/Waler Adjusting screws first, then turn the bottom nuts to raise or lower the gang as required.

NOTE: Forms should be cleaned and/or oiled before installation of the Set Back Cone and Anchor. It is recommended that these items remain oil free after they have been installed.

The Anchors used for the next Jump Shoe location can now be attached to the gang at the pre-drilled holes locations. Insert the setting bolt through the hole in the gang, place the Setback Cone, large diameter toward the form face, on the bolt and then screw the anchor on the setting bolt until it is snug (see Fig. 45).

Once installed, the form can be moved forward via the Track Frames using the Rack Adjustment Nuts (See Fig. 2 for location). First, remove the ¾" Fast Pins from the Carriage Locks. Next, flip the Carriage Locks to the open position to expose the spur gears. Using wrenches for a 1½" nut, rotate the Rack Adjustment Nuts until the gang makes contact with the wall. The Carriage Locks can then be closed and pinned shut.

NOTE: If the Carriage Lock can not be closed far enough to pin, and the forms will be tied immediately, the Carriage Lock can remain open. However, if the forms will not be tied immediately, the forms should be rolled back just enough to insert the ¾" pin and lock the carriage.

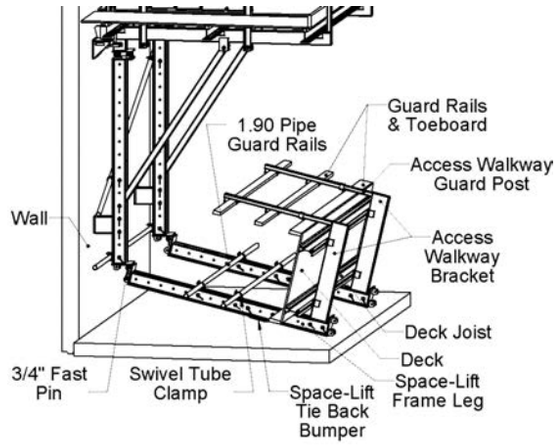

FIG. 55

When a Trailing Platform is used, the platform can be attached at any time after placement at the first jump position but before raising the form to the next position.

To pre-build the trailing platform if it can not be built in place, see details starting with Figure 40.

To build the trailing platform in place, begin by attaching the trailing Frame Legs with ¾" Fast Pins through the front connection studs allowing the Frame Legs to angle away and downward toward the prepared surface. Once the legs are attached, the Swivel Tube Clamps (P.C. F51231), used for the trailing platform interior guard rails, can be pinned to their locations as shown on the layout. Adding the 1.90 tubing of the correct length as the guard rails also acts as a spreader brace keeping the legs square and true.

NOTE: Always check squareness by diagonal measure before tightening the tube to the Swivel Clamps. Install the Access Walkway Bracket (P.C. F51242) using two ¾" Fast Pins for each bracket. Next, install the required deck joists and check squareness before tightening the bolts. It is recommended that the bolts be installed at alternate inside and outside locations. The trailing platform can now be finished by adding the Access Walkway Guard Post (P.C. F51243), decking, guardrails and toe boards, and the Space-Lift Tie Back Bumper (P.C. F51221).

NOTE: When using the four foot long Frame Leg, the distance to the ground may create an angle that causes the Guard Posts to hit the Space-Lift Diagonal. If this occurs, simply install Guard Post with the bottom bolt only allowing them to fold outwardly, then swing them into position after the Platform has been rotated and locked in it's final position.

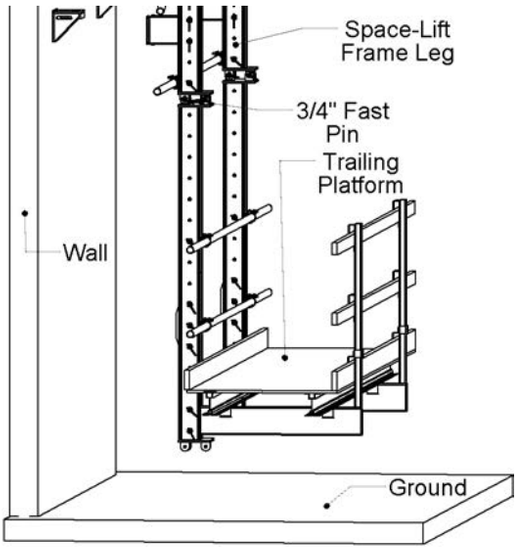

FIG. 56

Once the pour sequence and appropriate setting time are complete, and the ties and Setting bolt have been removed, the gang can be tilted back slightly to strip it from the wall. The gang can then be moved back via the Rack Adjustment Nut (See Fig. 2 for location) to allow cleaning, oiling, and installation of the anchor for the next pour.

The next set of Space-Lift Jump Shoes (P.C. F51236) can now be bolted to the previously set anchors using the Space-Lift Anchor Bolts and Set Back Cones (P.C. 1256980 and F51399) (see Fig. 47 for Jump Shoe attachment). Adjust the gang using the Rack Adjustment Nut to a position that allows the whole Space-Lift jump form to hang as close to vertical as possible when picked from the Swivel Lift Brackets (P.C. F51200) attached to the top of the 5" Versiform walers.

CAUTION: Be sure to release the Lift Lock, remove the Tie Backs at the bottom, and remove the lower Jump Shoes for re-use, before lifting the Jump Form with the crane.

As the Space-Lift jump form is lifted from its jump shoes, the trailing platform will fold back until the final ¾" Fast Pins can be installed through the back side connection studs. This will be the final configuration of the Space-Lift jump form for the remainder of the project.

NOTE: If installing a pre-built Trailing Platform, set the platform assembly as close as possible to the hanging Jump form with the connection stud end propped up about 12" off of the ground. Lift the Space-Lift jump form from its Jump Shoes and lower to the ground until the front connection studs can be pinned using the ¾" Fast Pins. As the Space-Lift jump form is lifted, the trailing platform will fold back until the final ¾" Fast Pins can be installed through the back side connection studs.

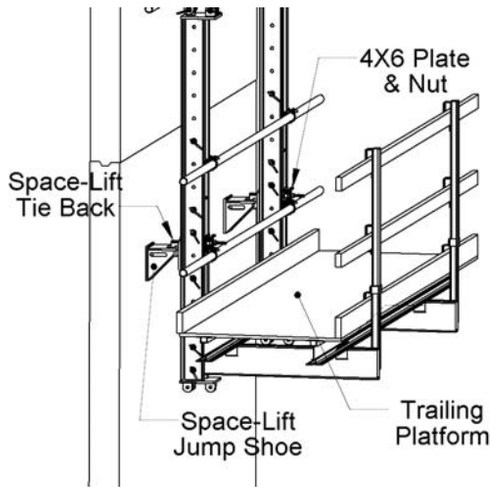

FIG. 57

After landing the Space-Lift jump form at the new Jump Shoe location (see Figs. 49 and 50 for details), be sure to re-engage the Lift Lock.

Provided there is no external forces acting on the face of the gang such as high winds, the crane may then be released, otherwise the Tie back procedure outlined below must be concluded prior to crane release.

The trailing platform must be secured to the previous Jump Shoes with the Space-Lift Tie Back (P.C. F51237) (See Fig. 10) by passing it between the channels of the Frame Leg and hooking it into the slot of the Jump Shoe. The 4"x6" Plate and Nut, a single piece assembly, is now screwed onto the Tie Back with the plate against the face of the Fame Leg. The Tie Back should be hand tightened and tapped one quarter turn. The Tie Back prevents over turning of the assembly due to external forces on the back of the gang.

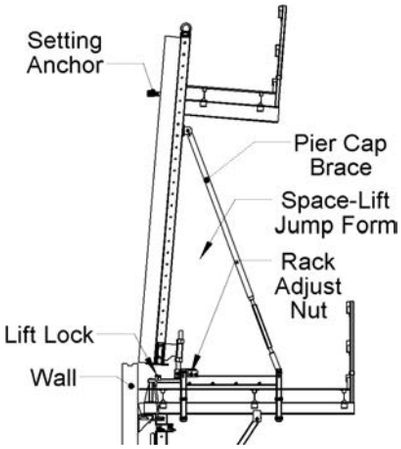

FIG. 58

Once the Jump Form is secured, the gang can be tilted to vertical using the Pier Cap Brace turnbuckle and moved to pour position against the top of the previous pour using the Rack Adjusting Nut. Close the Rack Lock and re-pin the cover once the gang is moved into position (see Fig. 54 for additional information). The opposite form can now be placed and tied to the gang as shown on the forming layout (see Fig. 59).

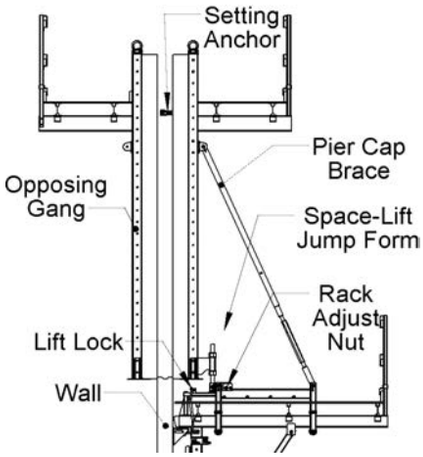

FIG. 59

SPACE-LIFT™ SYSTEM CYCLING

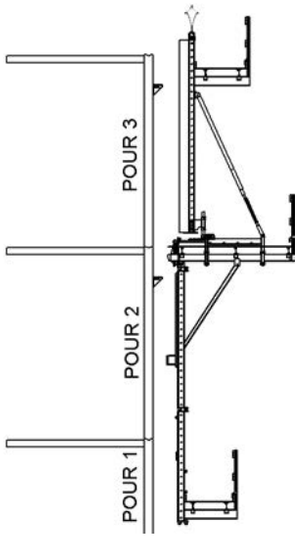

FIG. 60

Lifting

After stripping the gang, lock the Track Frame (Fig. 2) in place and attach the crane lines to the lift brackets. The Tie Backs must now be released and Jump Shoes removed. The Lift Lock (see Fig. 2) can be released. Carefully lift the Jump Form clear of the Jump Shoes and move it up to above the newly placed Jump Shoes. Lower the Jump Form onto the Shoes, being sure the Setting Pin (see Fig. 2) fully engages in the slot in the Shoes.

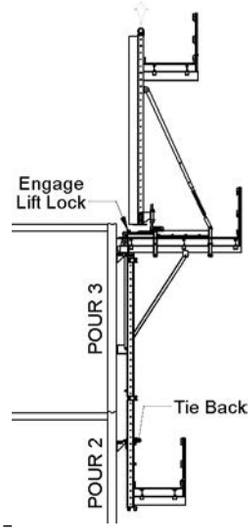

FIG. 61

Landing

Once the Jump Form is seated on the Jump Shoe, engage the Lift Lock on each unit by pulling back on the handle until the handle clasp can capture it. Next, the Tie Backs

should be installed to the lower jump Shoes (see Fig. 57). The crane can now be released.

CAUTION: Workers shall not be allowed on or directly under any Space-Lift Assembly while it is being moved or suspended in the air.

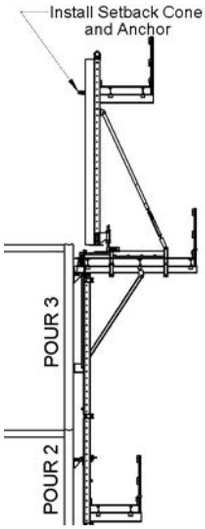

FIG. 62

Wall and Form Maintenance and Preparation
Clean and oil forms as required before installing the Anchor and Setback Cone for the next pour (see Fig. 45).

The gang can now be moved to the wall using the Rack Adjustment Nut on the Track Frame (see Fig. 2).

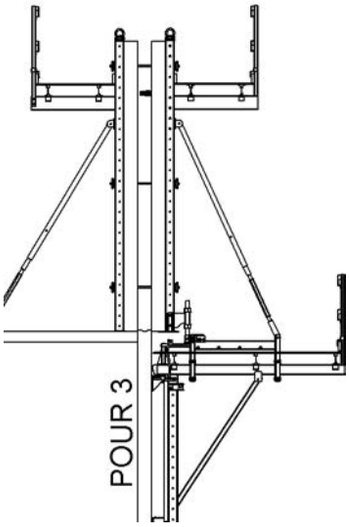

FIG. 63

Position and Tie
Once the gang is against the wall, the Carriage Lock can be closed and pinned (see Fig.2).

NOTES: If the Carriage lock cannot be closed far enough to pin, and the forms will be tied immediately, the Carriage Lock can remain open. However, if the forms will not be tied immediately, the forms should be rolled back just enough to insert the ¾" pin and lock the carriage. Place the opposite side gang and place the ties. The form is now ready for concrete placement.

NOTE: When moving the gang against the wall, DO NOT over-stress the spur gear by forcing the gear into position to insert the Fast Pin in the Carriage Lock.

SPACE-LIFT CURVED WALL

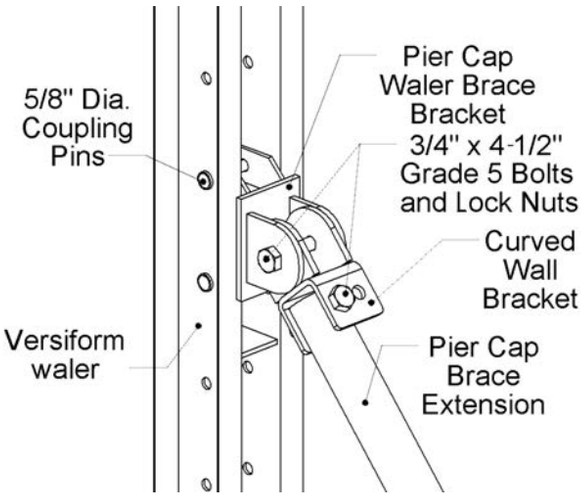

FIG. 64

When using the Space-Lift in a curved wall application, an additional part, the Curved Wall Bracket (P.C. F51246) is required for use with the Pier Cap Brace (see Fig. 64). Because the Space-Lift units must remain parallel to each other to allow the gang to be rolled forward or backward, and the Versiform walers attached to the gang are angled due to the curvature of the form, the Pier Cap Brace may not fit properly between the ears of the Pier Cap Waler Brace Bracket. The Curved Wall Bracket solves this by allowing the attachment point of the Pier Cap Brace Extension to adjust in two directions. The Curved Wall Bracket can move up and down on an arc and allows the Pier Cap Brace Extension to be swiveled left to right and provides two hole options for bolting. The Curved Wall Bracket is bolted to the Pier Cap Waler Brace Bracket with one ¾" x 4½" bolt (P.C. F51387) and a ¾" lock nut (P.C. F51392). The Pier Cap Brace bolts to the Curved Wall Bracket with the same bolt and nut combination.

See Fig. 27 for Pier Cap Waler Brace Bracket attachment to the Versiform waler.

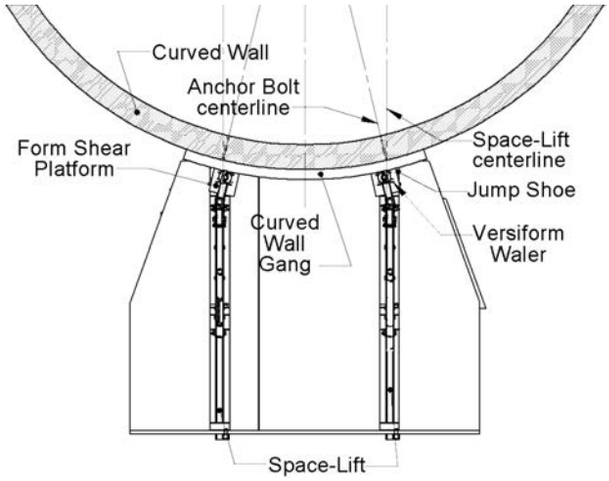

FIG. 65

The Space-Lift center-to-center spacing is used as a starting point to determine the anchor bolt (P.C. F125698) center line. The Space-Lift spacing may vary slightly from the original intent due to the type of forms used, location of attachment points on those forms, available location for the setting bolt hole, or any other reasons that may become apparent after finding the anchor center line. The Jump Shoe is the one common part between the wall and the Space-Lift with known dimensions, so start by drawing an arc 6" from the face of the wall being formed. Draw a chord on this arc the exact dimension of the Space-Lift center-to-center spacing. The location of the anchor center line is found by drawing a line from the center point of the wall arc to each end of the chord and locating the anchor center line at the intersection of the radial lines and the face of the wall being formed. (See Figures 66 and 67)

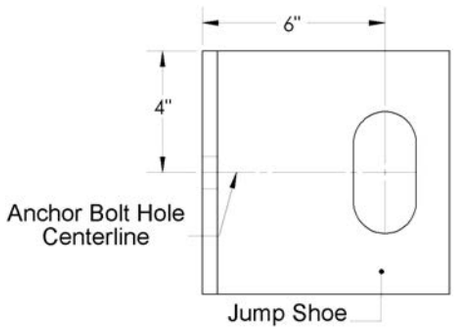

FIG. 62

Specific Recommendation:
When used with curved wall applications, the Space-Lift system should always be picked using a spreader beam.

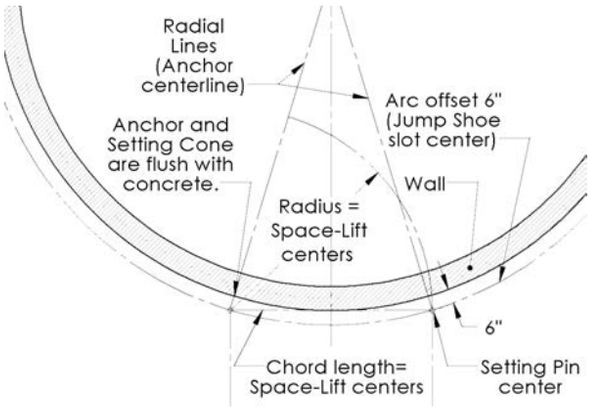

FIG. 66

Anchor center example:
Draw an arc 6 inches off of the face of the wall to be formed. This is the setting pin center and in this example the outside of the wall is shown. From a point on the first arc scribe a second arc (Radius = Space-Lift centers) equal to the spacing required between the Space-Lift units. From the point where the second arc crosses the first, draw a line back to the origin of the second arc (Chord length). Scribing radial lines from the center point of the wall arc to the two ends of the chord will provide the Anchor center lines (See Fig. 67).

Because the Space-Lift units must remain parallel in order for the Gang to be able to move, and the Versiform walers attached to the gang are angled due to the curvature of the gang, the anchor bolt hole location in the gang will not fall at the center of the waler. The center of the hole may actually fall directly beneath the flange of a Versiform waler depending on the radius of the wall. If this occurs, a spacer must be placed between the waler flanges and the contact point of the gang to allow enough room for the bolt to be inserted straight in and out of the hole. The thickness and location of the spacer will be based on the form being used. For Flex-Form, a 4¼" thick form, a 1" (1⅛" plywood) spacer can be used because the setting and anchor bolts can both be 4 inches long. This is because the Flex-Form face is 3⁄16" thick steel and the Jump Shoe back plate is ½" thick. The thinner material of the gang face allows the 4" setting bolt to go further into the anchor, which provides clearance when the 4" Anchor bolt is inserted through the thicker Jump Shoe back plate.

For Rapid Clamp, the spacer is 1½". Because the face is 19mm (approx. ¾"), it requires a 4½" setting bolt and a 4" anchor bolt. This provides clearance when the 4" anchor bolt is inserted through the ½" thick Jump Shoe back plate.

REFERENCE: The 4" bolt is 4 51⁄64" long, including the head thickness. This is the actual clearance distance needed.

If Setting Bolts are used, 4½" bolt is 5½" long, including the head thickness. This is the actual clearance distance needed.

For smaller radii where spacers are required, the Flex-Form application will require that the Form Shear Platform (See Fig. 17) be rotated 180˚ from its normal use side, to attain a wider platform surface due to adding the spacer between the gang and the waler.

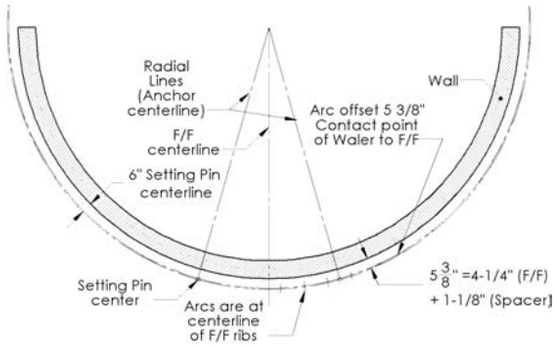

FIG. 67-1

The purpose of this procedure is:

1. To determine if the Anchor center line will pass through the form face without hitting any of the vertical ribs (2½" wide).

2. To determine, once an anchor location is found, if the Versiform waler will clear all bolts used to bolt the Flex-Form verticals to the ribs.

Start by either estimating the Space-Lift center to center or an anchor center line location close to what the Space-Lift center-to-center should be. This procedure allows adjustment either way. This assumes the ability to lay out in a CAD program.

As stated earlier, the Flex-Form requires a 1⅛" spacer between the Versiform waler and the Flex-Form ribs. An arc must now be scribed 5⅜" from the face of the wall. (Flex-Form = 4¼" + 1⅛" wood block = 5⅜") This is the contact point of the Versiform Waler and the Flex-Form with the spacer. Using a vertical center line as the middle of the panel, scribe a series of arcs from the vertical center line off to one side using the rib spacing (listed in the Flex-Form manual) to determine the rib center lines. Don't forget to consider ½ of the rib width (1¼") on each side of this mark when checking for clearances. Once it has been determined that the anchor center line passes cleanly through the face of the panel, it must be

determined if this location provides clearance for the Versiform waler (6½" wide) to clear any bolts used in the assembly of the Flex-Form panel itself.

NOTE: 12 foot Flex-Form panels have vertical rib at the middle of the panel while 8 foot panels have a vertical rib on either side of the centerline.

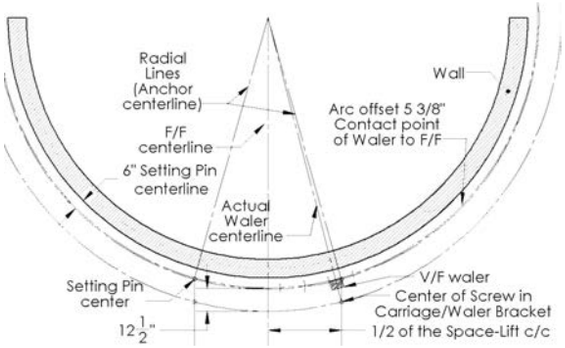

FIG. 67-2

To determine if the Versiform waler clears the bolts at the top and bottom of the vertical ribs:

1. Offset another arc from the 5⅜" arc by a distance of 12½". This is the distance from the Versiform waler face touching the 1⅛" block to the center of the screw in the Carriage/Waler Bracket.

2. The Carriage/Waler Bracket mounting holes are 10" from the center of the screw plus add 2½" to allow for half of the Versiform waler depth. This step is important because as the Space-Lift assemblies must remain parallel, the Carriage/Waler Bracket must rotate about its screw jack to allow the Versiform waler to match the curve/angle of the Flex-Form panel.

3. From the setting pin center point, drop a vertical line through the new offset arc.

4. At the point of intersection, draw a radial line back to the center of the main wall arc. This is the "Actual Waler Centerline".

5. By offsetting a line 3¼" to either side of this line, it can be determined if the Versiform waler will be too close to a rib and possibly hit a bolt.

In the example above, the anchor hole would probably have to be moved further toward the next outside rib as it appears the Versiform waler may hit the bolts for the vertical/rib connection.

NOTE: You will notice that on outside forms, the anchor hole falls toward the outside of the waler and on an inside forms the anchor hole will fall toward the inside.

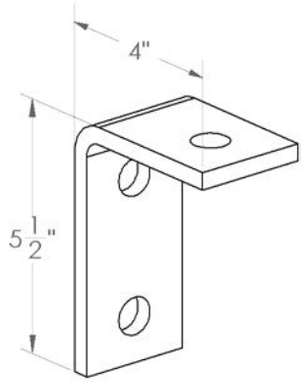

FIG. 68

The "J" Hook Angle (P.C. F51364) is required when Flex-Form gangs are used in a Space-Lift application. The "J" Hook provides a method of attaching the Versiform waler off center of the Flex-Form verticals by providing an attachment point for the hook at the desired locations. The "J" Hook is bolted to the vertical with two ¾" x 2" Speed Bolts (P.C. F32191) and Nuts (P.C. F32193). The "J" Hook can be used by itself or, more commonly, two can be used with the Waler Tie Back Bar for more adjustability in locating the waler (see Figs. 68, 69, and 70).

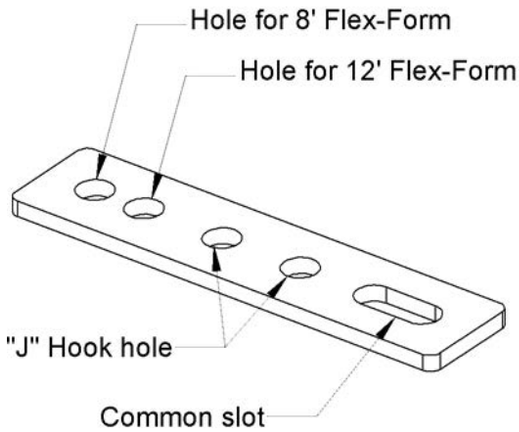

FIG. 69

The Waler Tie Back Bar (P.C. F51365) is used to provide more adjustability in locating the waler. It is bolted to "J" Hook Angles using one ¾" x 2" Speed Bolt and Nut per end (see Fig. 67).

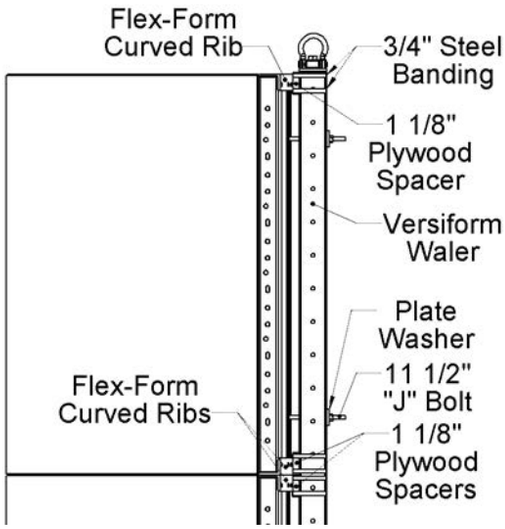

FIG. 70

Figure 66 shows a side view of the Walers with 1⅛" plywood spacers banded in place. The 11½" "J" bolts go through the waler and hook into the Waler Tie Back Bar which is bolted to two "J" Hook Angles which are bolted to two Flex-Form verticals at the required locations. The "J" Bolt may be off center based on the Anchor hole location (see Fig. 71).

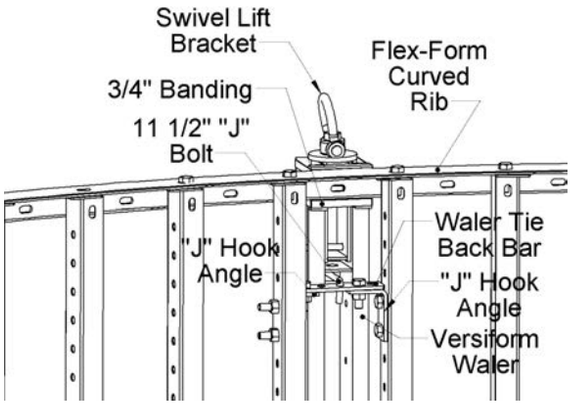

FIG. 71

Figure 710shows the connection of the Waler Tie Back Bar from the concrete side with the Flex-Form skin removed for clarity.

> **NOTE:** When using the 8' Flex-Forms with the Tie Back Bar between the second and third vertical ribs from the end, the "J" Hook must be bolted to the vertical using the single hole leg. This is due to the large spacing between the verticals with the channel legs facing each other.

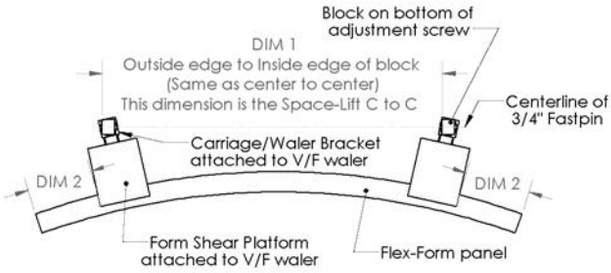

FIG. 72

It is recommended that the Space-Lift units be braced together before attempting to place the walers on the gang. The spacing between them should be measured from the point where the Carriage/Waler Bracket attaches to the Track Frame for best results.

When the center-to-center of the Space-Lift frames have been determined, the Versiform walers must be attached to the Flex-Form panel in the proper locations. Placement of the walers is crucial to being able to place the gang on the Space-Lift frames. On flat panel gangs, this is simply a matter of subtracting the Space-Lift center-to-center dimension from the gang width and dividing the answer by 2 (i.e. Space-Lift c-to-c = 8' and gang is 14' wide, so waler center-to-gang edge is 3'). On curved gangs, however, this task is a bit more of a challenge.

By using a few easy steps, this can be done quickly and accurately:

1. First, attach "J" Hook Angles and Waler Tie Back Bars to the gang as required at the location determined in the previous steps (starting with Fig 67-1).

2. Next, place the walers with the Carriage/Waler Bracket and Form Shear Platform attached, at their approximate locations on the back of the gang.

3. Secure the walers to the "J" Hooks/Tie Back Bars using the 11½" "J" bolts and Plate Washers, but do not over-tighten as they must be able to be adjusted into their final location.

4. Set the blocks on the adjustment screw so the holes for the ¾" pins line-up. This can be done simply by placing a straight edge on top of the blocks.

5. Set DIM 1, from Fig 72, by moving one or both of the walers to the center-to-center spacing of the Space-Lift frames.

6. Measure the DIM 2 locations and adjust until equal. For example if the left DIM 2 = 10" and the right DIM

2 = 12", simply move everything to the right by 1" to get 11" on each side.

7. Re-check the block center-to-center to verify and, once the dimensions all check, tighten all the bolts on the "J" Hooks.

NOTE: If the gang is lifted without a spreader, the walers may shift preventing the attachment of the gang to the Space-Lift frames.

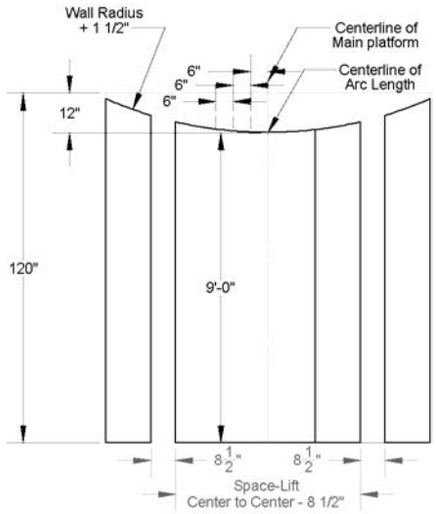

FIG. 73

Lay out the plywood main deck for a curved wall application by creating a scale drawing to determine points on the deck that be connected to create a large arc (Fig. 73). On a straight wall, the deck is a nine foot piece of plywood starting 1½" off of the wall and ending at the outside edge. However, to maintain the 1½" gap on curved wall applications, the starting piece must have a ten foot length to allow a portion of the plywood to be removed to accommodate the curve.

1. Start by laying out the middle of the deck.

2. Once the center-to-center of the Space-Lift units is known, simply subtract 8½" inches to allow for the Track Frame (see Fig. 2) required gap. This is the total width of the middle platform.

3. Split the total width in half and draw a main platform centerline.

4. Measure from the front edge of the plywood and place a mark on the centerline at the one foot mark. Use this mark as the center of the arc length contact point.

5. Draw lines parallel to the center line moving left and right in 6" increments.

6. Measure from the front edge to where the additional lines intersect the arc to determine transferring points to the actual plywood.

7. Connect these points to create a reference arc on the plywood as a cut line.

NOTE: The previous procedure is not necessary if there is enough room to lay out the plywood in actual size.

Crane Picks:
It is suggested that for curved wall applications using Space-Lift and lifting from the Versiform walers, a spreader be used at all times. If a spreader is not used, additional waler connections and/or bracing is required to prevent the walers from sliding together toward the center of the gang.

Bracing:
Normally the 1.9 pipe bracing for the Space-Lift units can be installed on the wall side of the Space-Lift Frame Leg to provide more room on the platforms (See Fig. 38), however, if the radius of the wall is small enough and the Space-Lift units are spread out, the bracing may have to be placed on the front face of the Space-Lift Frame leg to prevent it from hitting the face of the wall.

Space-Lift Tie Back Bumper:
Due to the reduction of space between the Jump Shoe and the trailing Space-Lift Frame Leg because of the angle between the Shoe and Leg, the Tie Back Bumper will not be used on walls with extremely tight radii.

SAFETY RULES

Space-Lift Assembly
Never assemble the gang form and Space-Lift as one unit on the ground. Picking this combination puts undue stress on the Carriage/Waler Bracket and Pier Cap Brace which are intended for vertical load only. The Space-Lift must be placed on the wall first, then the Gang can be flown up and attached.

When moving the Jump Form from its last use at the completion of the project, never lower the gang form and Space-Lift as one unit down to the ground. Laying this combination down puts undue stress on the Carriage/ Waler Bracket and Pier Cap Brace which are intended for vertical load only. The Gang must be separated from the Space-Lift and flown down to the ground first.

It is not recommended that the Space-Lift and trailing platform be built as a single unit. Lifting this combination from the ground puts undue stress on the connection between the main assembly Frame Legs and the trailing platform Frame Legs. These connections are designed for vertical load only. This condition would only occur if the first Space-lift placement location was far enough above the ground to allow the trailing platform to hang straight down.

When removing the Space-Lift from its last use at the completion of the project, the trailing platform will still be attached.

Before placing the unit flat on the ground the back Fast Pins at the trailing platform connection should be removed so that the trailing platform can fold as the unit is laid flat (similar to Fig. 55).

Space-Lift Use
When moving the gang against the wall, DO NOT over-stress the spur gear by forcing the gear into position to insert the Fast Pin in the Carriage Lock.

If the Carriage lock can not be closed far enough to pin, and the forms will be tied immediately, the Carriage lock can remain open. However, if the forms will not be tied immediately, the forms should be rolled back just enough to insert the ¾" pin and lock the carriage.

The gang form must never be left in a rollback position or be left untied to the opposite gang form overnight or for an extended length of time during extremely windy conditions.

CAUTION: Workers are NOT allowed on or directly under any Space-Lift Assembly while it is being moved or suspended in the air.

SPACE-LIFT PRODUCT INDEX

Part Description	Product Code	Weight	Page
Space-Lift Carriage Assembly	F51215	335 Lbs	3, 30
Space-Lift Frame Diagonal	F51239	53 Lbs	3, 30
Space-Lift 10' Space-Lift Leg	F51310	198 Lbs	3, 31
Space-Lift 8' Space-Lift Leg	F51308	165 Lbs	3, 31
Space-Lift 4' Space-Lift Leg	F51304	192 Lbs	3, 31
Space-Lift Kick Tube	F51235	11 Lbs	4, 31
Space-Lift Swivel Tube Clamp	F51231	3.5 Lbs	4, 33
Space-Lift Jump Shoe	F51236	27 Lbs	4, 31
Space-Lift Tie Back Bumper	F51221	5 Lbs	5, 32
Space Lift Tie Back	F51237	1.5 Lbs	5, 32
Space-Lift ¾" Fast Pin	F51396	1 Lbs	9, 33
Carriage/Waler Bracket	F51232	50 Lbs	4, 32
Swivel Lift Bracket	F51200	20 Lbs	5, 33
Form Shear Platform	F51240	24 Lbs	6, 34
Pier Cap Brace Bracket	F51209	11 Lbs	6, 34
Access Walkway Bracket	F51242	62 Lbs	6, 34
Access Walkway Guard Post	F51243	24 Lbs	6, 35
Carriage/Waler Wrench	F51367	5 Lbs	9, 35
Lumber Bracket	F51368	3.8 Lbs	

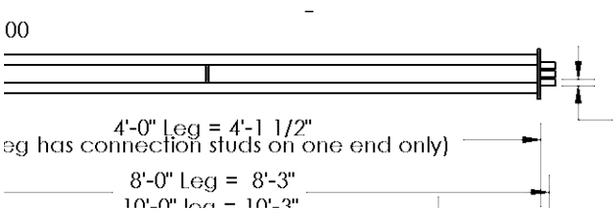

Space-Lift Frame Leg
4' P.C. F51304
8' P.C. F51308
10' P.C. F51310

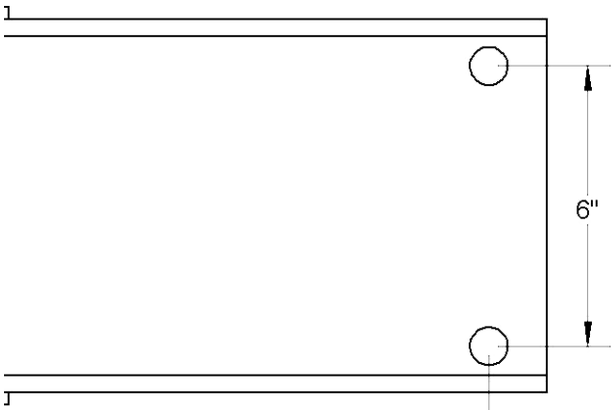

Space-Lift Kick Tube
P.C. F51235

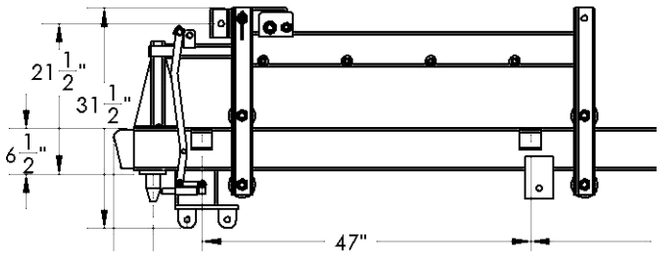

Space-Lift Carriage Assembly
P.C. F51215

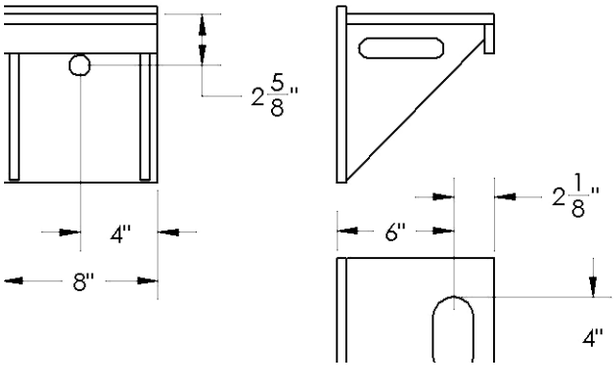

Space-Lift Jump Shoe
P.C. F51236

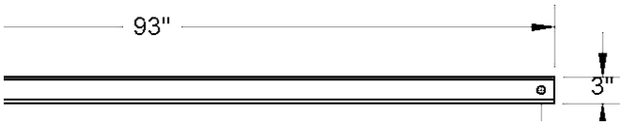

Space-Lift Frame Diagonal
P.C. F51239

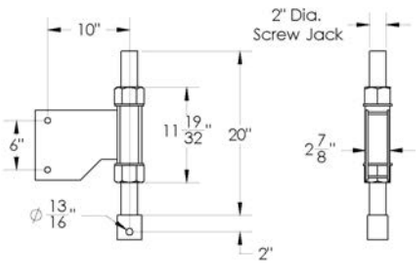

Space-Lift Carriage/Waler Bracket
P.C. F51232

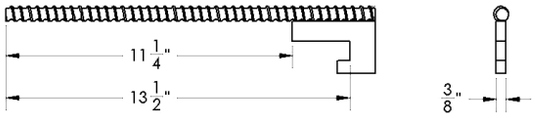

Space-Lift Tie Back
P.C. F51237

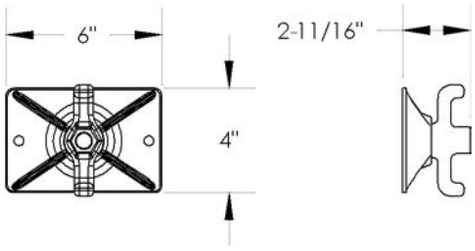

4 x 6 Plate and Nut
P.C. F722110

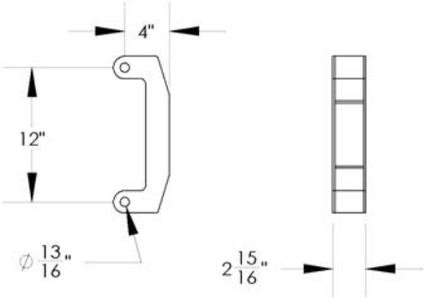

Space-Lift Tie Back Bumper
P.C. F51221

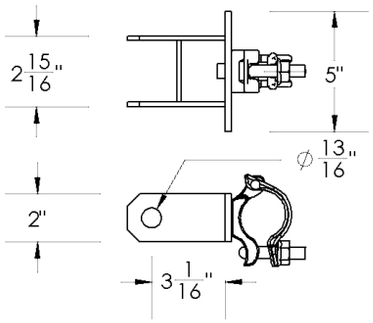

Space-Lift Swivel Tube Clamp
P.C. F51231

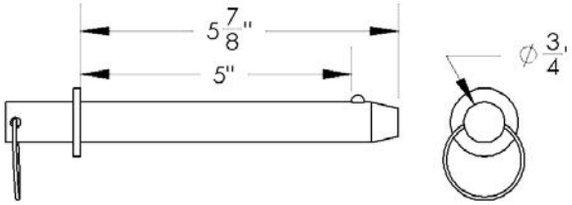

Space-Lift ¾" Fast Pin
P.C. F51396

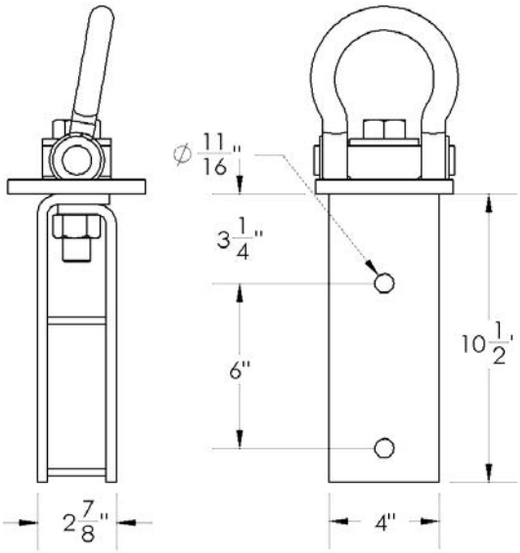

Swivel Lift Bracket
P.C. F51200

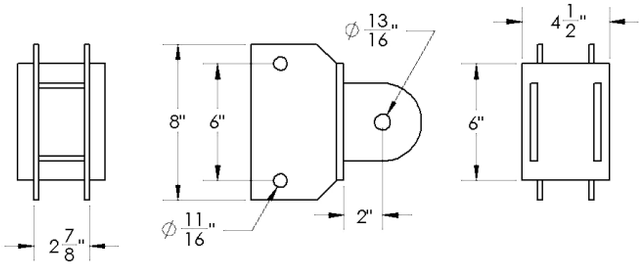

Pier Cap Brace Bracket
P.C. F51209

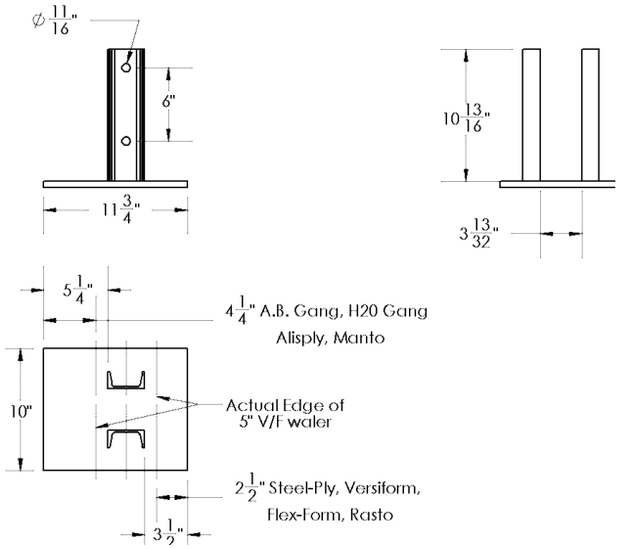

Form Shear Platform
P.C. F51240

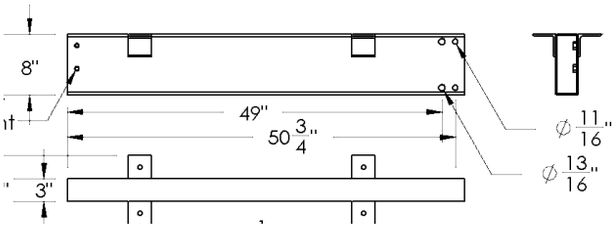

Access Walkway Bracket
P.C. F51242

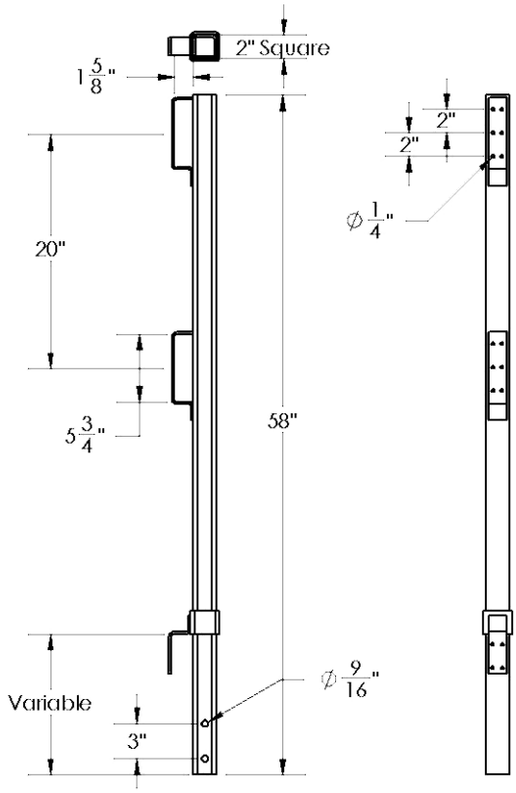

Access Walkway Guard Post
P.C. F51243

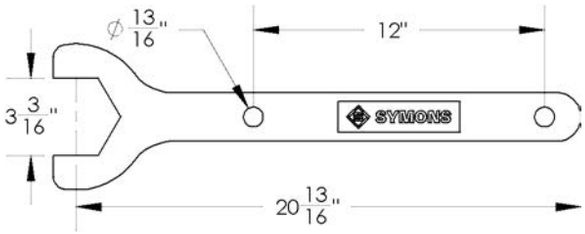

Carriage/Waler Wrench
P.C. F51367

SYMONS®
By Dayton Superior

Safety Information

⚠ WARNING

Improper Use of Concrete Forms and Shores Can Cause Severe Injury or Death

Read, understand and follow the information and instructions in this publication before using any of the Dayton Superior concrete accessories displayed herein. When in doubt about the proper use or installation of any Dayton Superior concrete accessory, immediately contact the nearest Dayton Superior Service Center or Technical Service Department for clarification.

Dayton Superior products are intended for use by trained, qualified and experienced workmen only. Misuse or lack of supervision and/or inspection can contribute to serious accidents or deaths. Any application other than those shown in this publication should be carefully tested before use.

The user of Dayton Superior products must evaluate the product application, determine the safe working load and control all field conditions to prevent applications of loads in excess of a product's safe working load. Safety factors shown in this publication are approximate minimum values. The data used to develop safe working loads for products displayed in this publication are a combination of actual testing and/or other industry sources. Recommended safe working loads given for the products in this publication must never be exceeded.

Worn Working Parts

For safety, concrete forms must be properly used and maintained. Concrete products shown in this publication may be subject to wear, overloading, corrosion, deformation, intentional alteration and other factors that may affect the device's performance. All reusable products must be inspected regularly by the user to determine if they may be used at the rated safe working load or should be removed from service. The frequency of inspections depends upon factors such as (but not limited to) the amount of use, period of service and environment. It is the responsibility of the user to schedule inspections for wear and remove the hardware from service when wear is noted.

Shop or Field Modification

Welding can compromise a product's safe working load value and cause hazardous situations. Knowledge of materials, heat treating and welding procedures is necessary for proper welding. Consult a local welding supply dealer for assistance in determining required welding procedures.

Since Dayton Superior cannot control workmanship or conditions in which modifications are done, Dayton Superior cannot be responsible for any product altered in the field.

Interchangeability

Many concrete products that Dayton Superior manufactures are designed as part of a system. Dayton Superior strongly discourages efforts to interchange products supplied by other manufacturers with components supplied by Dayton Superior. When used properly, and in accordance with published instructions, Dayton Superior products have proven to be among the best designed and safest in the industry. Used improperly or with incompatible components supplied by other manufacturers, Dayton Superior products or systems may be rendered unsafe.

Installation

WARNING

1. Dayton Superior Corporation products shall be installed and used only as indicated on the Dayton Superior Corporation installation guidelines and training materials.
2. Dayton Superior Corporation products must never be used for a purpose other than the purpose for which they were designed or in a manner that exceeds specific load ratings.
3. All instructions are to be completely followed to ensure proper and safe installation and performance
4. Any improper misuse, misapplication, installation, or other failure to follow Dayton Superior Corporation's instruction may cause product malfunction, property damage, serious bodily injury and death.

THE CUSTOMER IS RESPONSIBLE FOR THE FOLLOWING:

1. Conformance to all governing codes
2. Use of appropriate industry standard hardware
3. The integrity of structures to which the products are attached, including their capability to safely accept the loads imposed, as evaluated by a qualified engineer.

SAFETY INSTRUCTIONS:

All governing codes and regulations and those required by the job site must be observed. Always use appropriate safety equipment

Design Changes

Dayton Superior reserves the right to change product designs, rated loads and product dimensions at any time without prior notice.

Note: See Safety Notes and Safety Factor Information.

SYMONS®
By Dayton Superior
1125 Byers Road
Miamisburg, OH 45342
937-866-0711
888-977-9600
WWW.SYMONS.COM

PERFORM WITH PRECISION™

SYM91231
10/17

Copyright © 2017 Dayton Superior Corporation, All Rights Reserved.